RCA STANDARDIZING NOTICES ON EARLY TUBES

The following Standardizing Notices (SNs) cover manufacturing information on the 201A, 10, 50, and 245 tubes. Partial SNs, less the original drawings - large blueprints - are included on the A236A (a once-planned RCA VT-52) and A181A (prototype of the single-plate / 20-filament 2A3).

Most of this material is of 1930-31 vintage, from the period when RCA documented its products with crisp line drawings. Later drawings are of much lower quality.

It is clear from the 201A specs how closely the RCA and Cunningham product lines were intertwined - only the brand markings differed.

The sharp-eyed observer will note that pin numbers on these early tubes always have the big (filament) pins numbered "3" and "4." This is in accordance with General Electric practice from the '20s, before RCA got into tube manufacture.

It is also noteworthy that the tube drawings are dimensioned in a mix of metric and English units - millimeters, inches, mils. To make 1000 Type 10s, one needed 21.3 pounds of flange tubing and 86.5 meters of filament wire. This mixing of units lasted throughout RCA's manufacturing history. Tube manufacture may have been the first American industry to use metric dimensions.

The original files are part of the Dowd-RCA Archive, a resource of the Antique Wireless Association museum. Any published use of this material should credit AWA.

LAS 3-5-01

SECTION—Construction Data
SUBJECT—Index to Specifications for RCA Radiotron No. 201-A & Cunningham No. CX-301-A.

STANDARDIZING NOTICE No. 3-1-201-A
VT3-2-4
SUPERSEDES p. 1. DATED Sept. 5, '28

Incorporated in the succeeding pages of this Standardizing Notice are the complete specifications for manufacture of the RCA Radiotron No. 201-A and Cunningham No. CX-301-A tubes.

Page No.	INDEX
2.	Essential Technical Data Physical Dimensions
3.	Complete Tube Assembly
4.	Complete Mount Assembly
5.	Stem Specifications - Sub Assembly No. 1
6.	Filament Specifications
7.	Grid Specifications - Sub Assembly No. 2
8.	Plate Specifications
9.	Mica Spacer Specifications
10.	Filament Tension Support Mica Spacer Clip.
11.	Getter Specifications
12.	Bulb and Bulb Marking Specifications Basing (a) Base Specifications (b) Base Marking Specifications (c) Basing Cement Specifications (d) Contact Pin Solder Specifications (e) Base Threading Specifications
13.	Sealing and Exhaust Specifications Aging Specifications
14.	Factory Testing Specifications Packing Specifications
15.	Consolidated List of Parts and Materials.

Rmk 6/24/30

★ INDICATES A CHANGE
★★ INDICATES AN ADDITION

ESSENTIAL TECHNICAL DATA

1. TUBES - RCA Radiotron No. 201-A
Cunningham No. CX-301-A

2. CARTON RATINGS
   (a) Filament Volts- - - - - - - - - - - - - - - - - - 5.0
   (b) Filament Amperes- - - - - - - - - - - - - - - - - .250
   (c) Plate Volts - - - - - - - - - - - - - - - - - - - 135 (max.)

3. PUBLISHED CONSTANTS

(a) Plate Volts - - - - - - - - - - - - - - - - - - -	135	90
(b) Grid Volts- - - - - - - - - - - - - - - - - - - -	-9	-4.5
(c) Amplification Factor- - - - - - - - - - - - - - -	8.0	8.0
(d) Plate Resistance- - - - - - - - - - - - - - - - -	10000 ohms	11000
(e) Mutual Conductance- - - - - - - - - - - - - - - -	800 micromhos	725
(f) Plate Current - - - - - - - - - - - - - - - - - -	3.0 m.a.	2.5m.a.

4. DESIGN CONSTANTS

	Test Conditions E_f	E_p	E_g	I_g
(a) Amplification Factor-Mu.= 8.2(7.0-9.6)- - - -	5.0	90	-4.5	- -
(b) Plate Resistance- - -rp =11300(8250-16000)ohms	5.0	90	-4.5	- -
(c) Mutual Conductance- -Gm =725(550-875)micromhos	5.0	90	-4.5	- -
(d) Filament Current- - -I_f =.250(.235-.265)amp.-	5.0	0	0	- -

5. TEST LIMITS

(a) Emission Check- - - -E_f =3.80 Volts(max.) - -	- -	-22.5	+60	5 m.a.
(b) Gas - - - - - - - - - -I_p =3.0 microamps(max.)	- -	-22.5	+60	5 m.a.
(c) Leakage (Grid)- - - -I_g =2.0 microamps(max.)	0	-22.5	+60	- -
(d) Plate Current - - - -I_p =2.4(1.4-3.4) m.a.- -	5.0	90	-4.5	- -
(e) A.C.Amplification - - - - - - - - - - - - - - - -	5.0	90	-4.5	- -

   (1) Load Impedance - = 5500 ohms
   (2) Power Factor - - = .5
   (3) Signal Voltage - = 3.0(RMS)
   (4) Rejection Voltage= 7.0 (RMS)

Approved 6/24/30

E.T.D. FRI- 8-23-28

PHYSICAL SPECIFICATIONS

		m.m.	inches
(a) Overall Length- - - - - - - - -	Mfg.Av.	114(111.2-117.5)	4 3/8 - 4 5/8
	Inspection-	108 - 117.5	4 1/4 - 4 5/8
	Published -	119 max.	4 11/16 max.
(b) Sealing Length- - - - - - - - -	84 mm.		
(c) Seal inserted into base - - - -	13 mm.		

RCA Radiotron Company, Inc.

415 S. Fifth St., HARRISON, N. J.

STANDARDIZING DEPT.

DATE— JUNE 20, 1930

SECTION— CONSTRUCTION DATA

STANDARDIZING NOTICE No. 3-1-201-A

SUBJECT— COMPLETE TUBE ASSEMBLY FOR R.C.A. RADIOTRON NO. 201-A AND GUNNINGHAM NO. CX-301-A

SUPERSEDES p3/T3-2-4 DATED JUNE 15, 1928

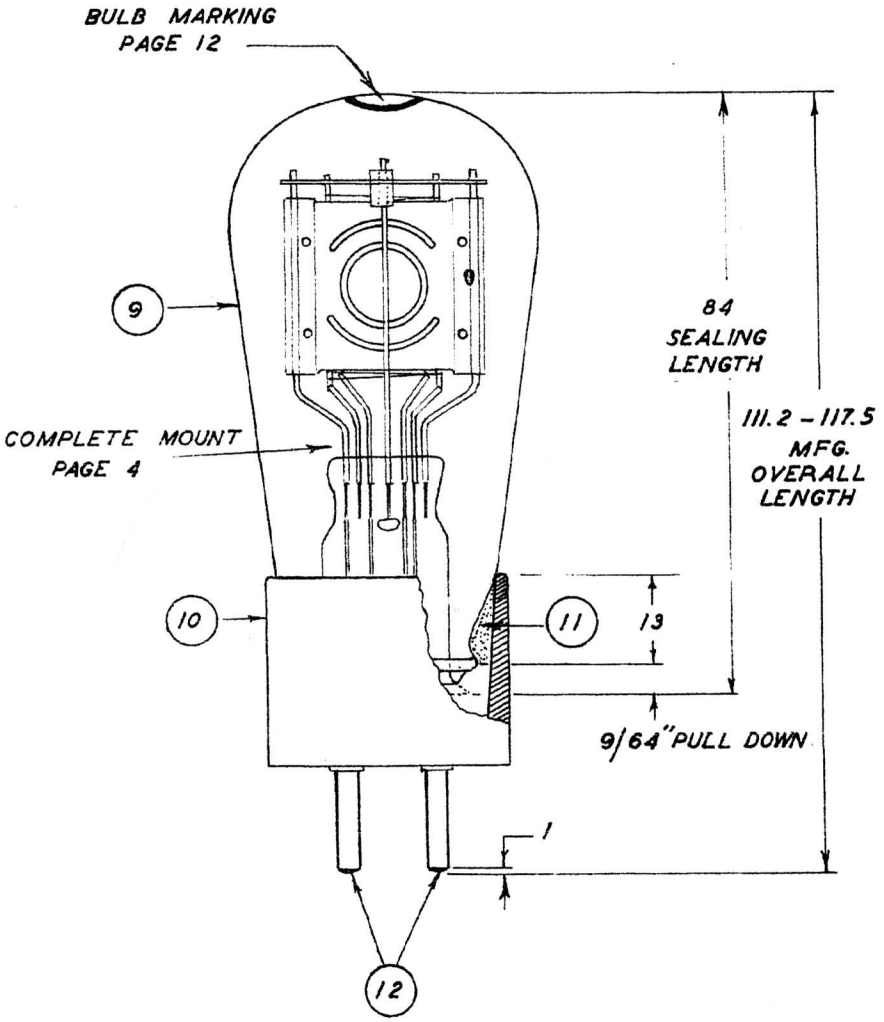

Amf 6/24/30

PART NO.	PART DESCRIPTION	PART SPEC.
9	BULB	PAGE 12
10	BASE	PAGE 12
11	BASING CEMENT	PAGE 12
12	SOLDER	PAGE 12

★ INDICATES A CHANGE

ALL DIMENSIONS IN MM. UNLESS OTHERWISE SHOWN

SCALE— 1:1

DRAWING No.

6-109

6-109

Form 91-2 1M 8-30 (N2135)

RCA Radiotron Company, Inc.

415 S. Fifth St., HARRISON, N. J.

STANDARDIZING DEPT.

PAGE NO.— 4

DATE— JUNE 20, 1930

SECTION— CONSTRUCTION DATA

SUBJECT— COMPLETE MOUNT ASSEMBLY SPEC.

STANDARDIZING NOTICE No. 3-1-201-A

SUPERSEDES P-4 T3-2-4 DATED MAY 10, 1928

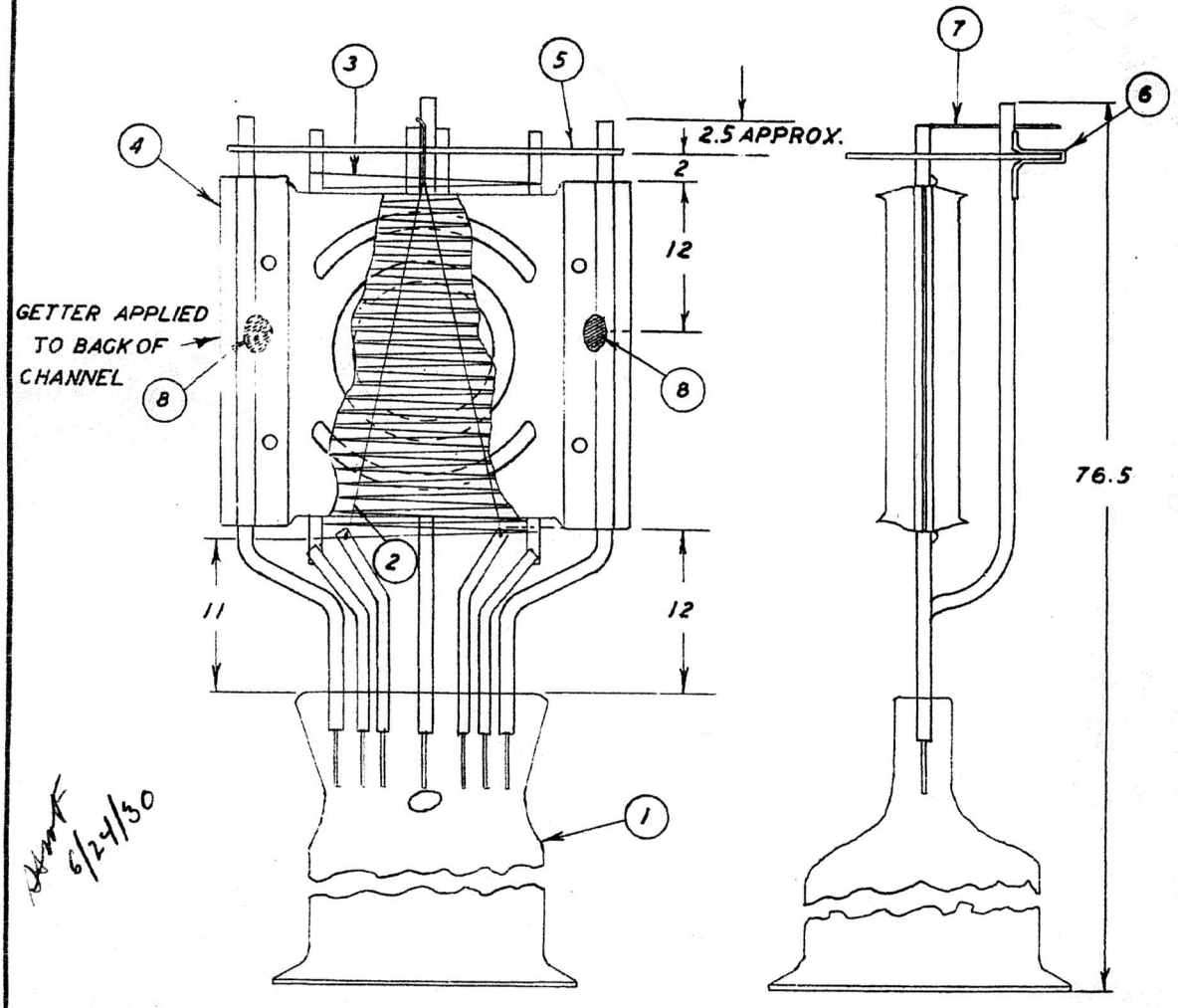

6/24/30

PART NO.	PART DESCRIPTION	DWG REF.
1	STEM SUB ASSEMBLY NO. 1	PAGE 5
2	FILAMENT	PAGE 6
3	GRID SUB ASSEMBLY NO. 2	PAGE 7
4	PLATE	PAGE 8
5	MICA SPACER	PAGE 9
6	MICA SPACER CLIP	PAGE 10
7	FILAMENT TENSION SUPPORT	PAGE 10
8	GETTER	PAGE 11

★ INDICATES A CHANGE

ALL DIMENSIONS IN MM. UNLESS OTHERWISE SHOWN

SCALE— 2:1

DRAWING No. 6-109

6-109

RCA Radiotron Company, Inc.

415 S. Fifth St., HARRISON, N. J.

STANDARDIZING DEPT.

DATE— JUNE 10 1930

SECTION— CONSTRUCTION DATA.

STANDARDIZING NOTICE No. 3-1-201-A

SUBJECT— STEM SPECIFICATIONS FOR R.C.A. RADIOTRONS NO. 201-A AND CUNNINGHAM NO. CX-301-A

SUPERSEDES p. 5-VT3-2-4 DATED JAN. 30 1929

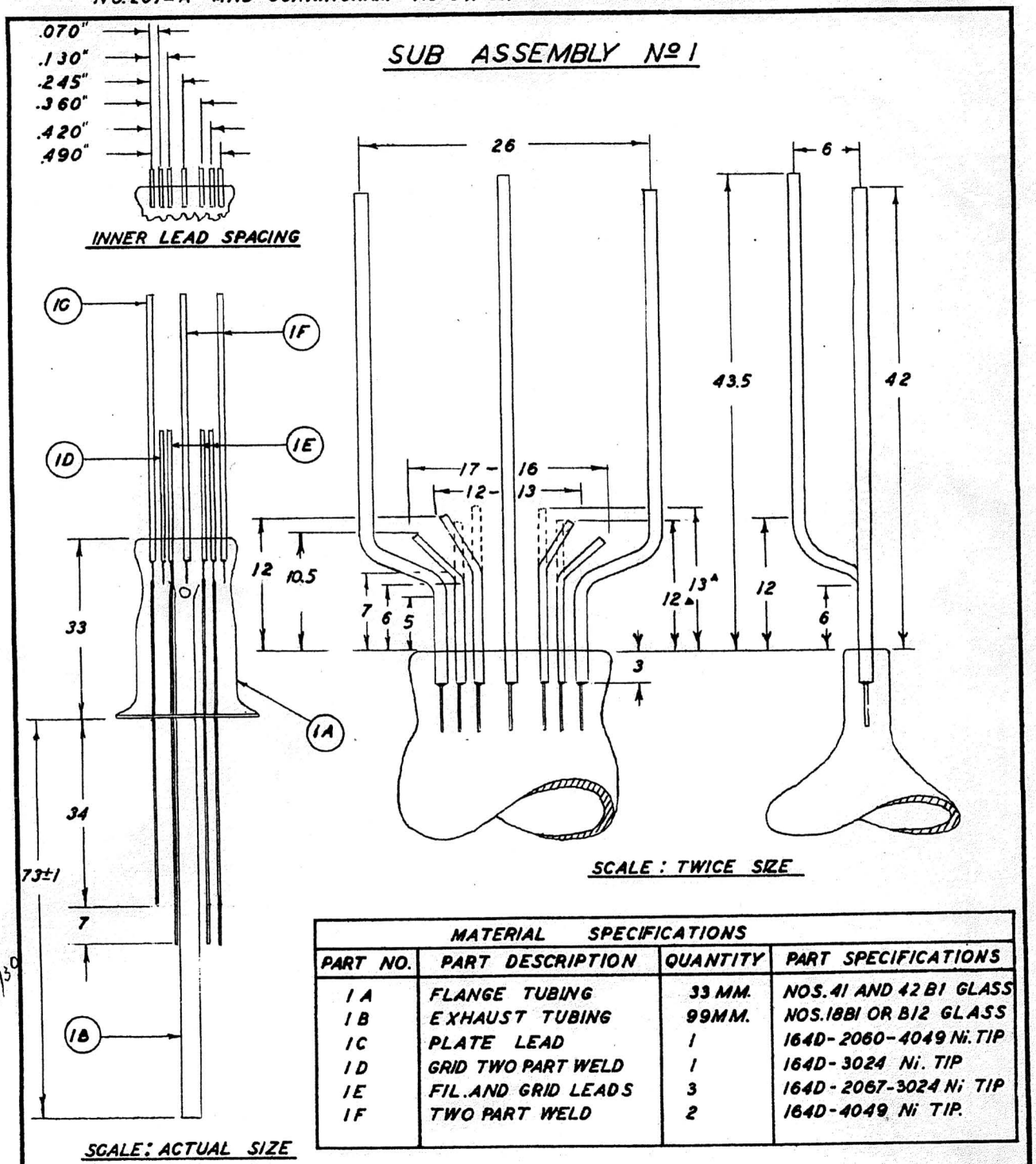

MATERIAL SPECIFICATIONS			
PART NO.	PART DESCRIPTION	QUANTITY	PART SPECIFICATIONS
1 A	FLANGE TUBING	33 MM.	NOS. 41 AND 42 B1 GLASS
1 B	EXHAUST TUBING	99 MM.	NOS. 18B1 OR B12 GLASS
1 C	PLATE LEAD	1	164D-2060-4049 Ni. TIP
1 D	GRID TWO PART WELD	1	164D-3024 Ni. TIP
1 E	FIL. AND GRID LEADS	3	164D-2067-3024 Ni TIP
1 F	TWO PART WELD	2	164D-4049 Ni TIP.

▲ INDICATES TRIMMED LENGTH

★ INDICATES A CHANGE

ALL DIMENSIONS IN MM. UNLESS OTHERWISE SHOWN

SCALE— AS SHOWN

DRAWING No. 6 — 109

Amt. 6/24/30

6-109

RCA Radiotron Company, Inc.
415 S. Fifth St., HARRISON, N. J.
STANDARDIZING DEPT.

SECTION— CONSTRUCTION DATA
STANDARDIZING NOTICE No. 3-1-201-A
SUBJECT— FILAMENT SPECIFICATIONS FOR R.C.A. RADIOTRON Nº 201-A AND CUNNINGHAM C X. 301-A
SUPERSEDES p.6 VT3-2-4 DATED NOV. 25. 1928

TUBE PART Nº 2

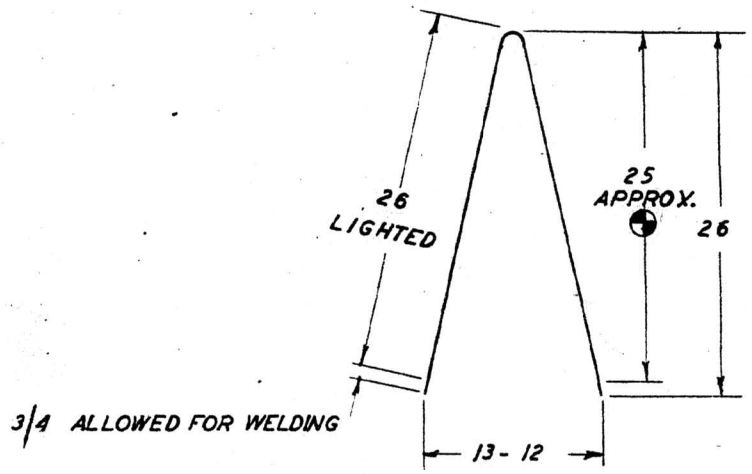

⊕ VERTICAL HEIGHT OF FILAMENT MOUNTED

MATERIAL SPEGIFICATIONS

1. WIRE - TUNGSTEN "V"
   (A) SPEC. FOR WIRE PREPARATION - - - - - - - - - - STDZG. NOTICE Nº 14C-1-2
2. WEIGHT OF WIRE - - - MGS 200 MM. - - - - - - - - 4.95 (4.9-5.0)
3. EQUIVALENT DIAMETER OF WIRE - - - - - - - - - - - 1.6 MILS

MANUFACTURING DATA

1. LIGHTED LENGTH OF FILAMENT - - - - - - - - - - - 52 MM.
2. AMOUNT ALLOWED FOR WELDING - - - - - - - - - - 1.5 MM. (3/4 MM EACH END)
3. TOTAL CUT LENGTH OF FILAMENT - - - - - - - - - - 53.5 MM.

JWF 6/27/30

★ INDICATES A CHANGE
ALL DIMENSIONS IN MM UNLESS OTHERWISE SHOWN
SCALE— 2:1
DRAWING No.

RCA Radiotron Company, Inc.

5. Fifth St., HARRISON, N. J.

STANDARDIZING DEPT.

SECTION— CONSTRUCTION DATA

STANDARDIZING NOTICE No. 3-1-201-A

SUBJECT— GRID SPECIFICATIONS FOR R.C.A RADIOTRON NO. 201-A AND CUNNINGHAM NO. CX-301-A

SUPERSEDES p. 7 VT3-2-4 DATED NOV. 25, 1928

SUB ASSEMBLY NO. 2

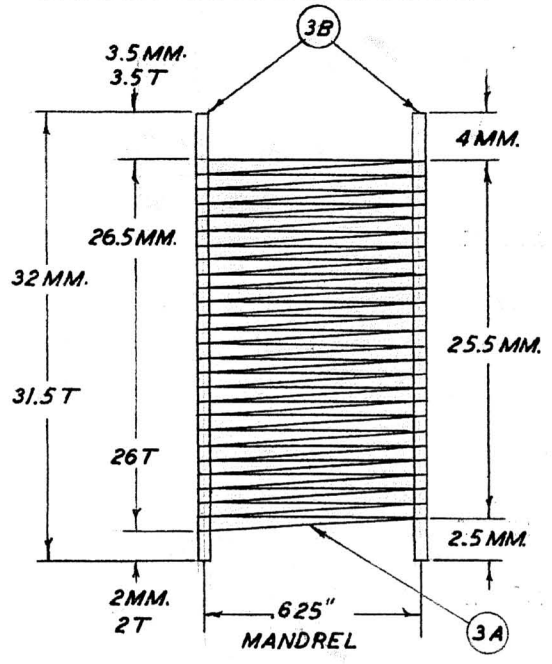

.095"-.100" OUTSIDE THICKNESS INSPECTION LIMITS

MATERIAL SPECIFICATIONS

▲ TUBE PART NO. 3A-GRID WIRE

1. MATERIAL — NICKEL-CHROMINUN
   (A) MATERIAL SPECIFICATIONS — 33C-N-3
2. WIRE WEIGHT LIMITS — (MGS./200 MM.) — 20.7-22.8
3. EQUIVALENT WIRE DIAMETER — 5.0 MILS.

TUBE PART NO. 3B GRID SIDE ROD

1. TYPE — 30-32 AI (DEAD SOFT) NICKEL STDZG. NOTICE NO. 13-1-1
   (A) MATERIAL SPEC. — 33C-N-5
2. NO. REQUIRED PER TUBE — 2

MANUFACTURING DATA

1. MANDREL SIZE — .081" X .625"
2. T.P.I. (PITCH OF WINDING) — 25
3. DISTANCE BETWEEN TURNS (CENTER TO CENTER) — 1.016 MM.
4. TOTAL TURNS ON WOUND GRID UNFINISHED — 31.5
5. TURNS REMOVED FROM TOP. — 3.5
6. TURNS REMOVED FROM BOTTOM — 2
7. TOTAL TURNS ON FINISHED GRID — 26

TREATMENT OF FINISHED GRID — NONE

▲ NOTE: TREATMENT OF GRID WIRE (OPTIONAL)
(A) GRID WIRE MAY BE TREATED AT WINDING AS SPECIFIED IN STDZ. NOTICE 34-2-5.

★ INDICATES A CHANGE

ALL DIMENSIONS IN
UNLESS OTHERWISE SHOWN

SCALE— 2:1 T=TURNS

DRAWING No. 6-109

SECTION— CONSTRUCTION DATA
STANDARDIZING NOTICE No. 3-1-201-A
SUBJECT—ANODE SPECIFICATIONS FOR R.C.A. RADIOTRON 201-A & CUNNINGHAM C X-301-A
SUPERSEDES p-11 VT3-2-4 DATED APRIL 15, 1927

TYPE P-60 PLATE

TUBE PART NO. 4

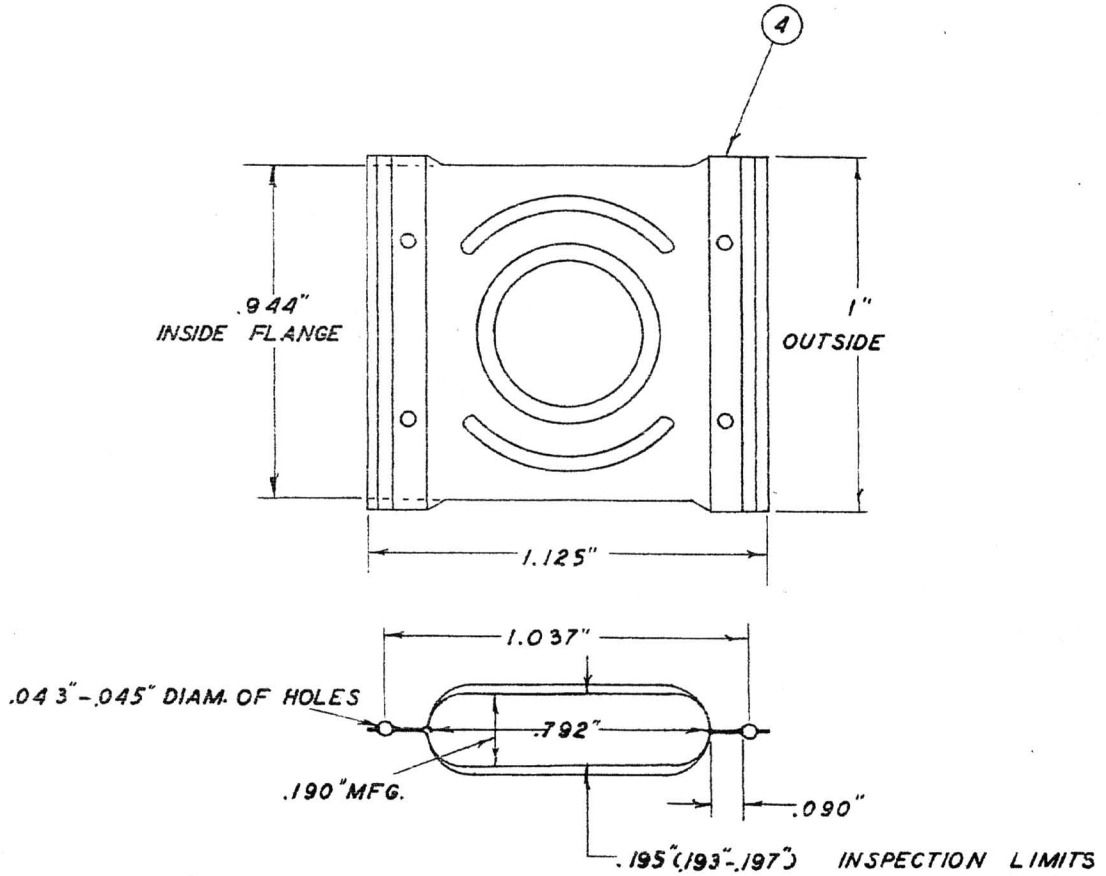

MATERIAL SPECIFICATIONS

1. MATERIAL .005 DEAD SOFT NICKEL RIBBON---- STDZ. NOTICE NO. VT33C-N-7

TREATMENT - FINISHED PLATE

1. SINTERING SCHEDULE NO. 34-1-1
   (A) TIME--- HEATED 3 MIN.--- COOLED 3 MIN.

INSPECTION LIMITS - FINISHED PLATE

1. OUTSIDE THICKNESS---------- .193"-.197"

AWF 6/24/30

★ INDICATES A CHANGE

ALL DIMENSIONS IN INCHES UNLESS OTHERWISE SHOWN

SCALE— 2:1

DRAWING No.

RCA Radiotron Company, Inc.

415 S. Fifth St., HARRISON, N. J.

STANDARDIZING DEPT.

SECTION— CONSTRUCTION DATA

STANDARDIZING NOTICE No. 3-1-201-A

SUBJECT— MICA SPACER FOR R.C.A. RADIOTRON Nº 201-A AND CUNNINGHAM CX-301-A

SUPERSEDES p.12VT3-2-4 DATED APR. 15, 1927

IM-4 MICA SPACER

TUBE PART NO. 5

INITIALLY USED IN UX-201-A
OLD No.: M66

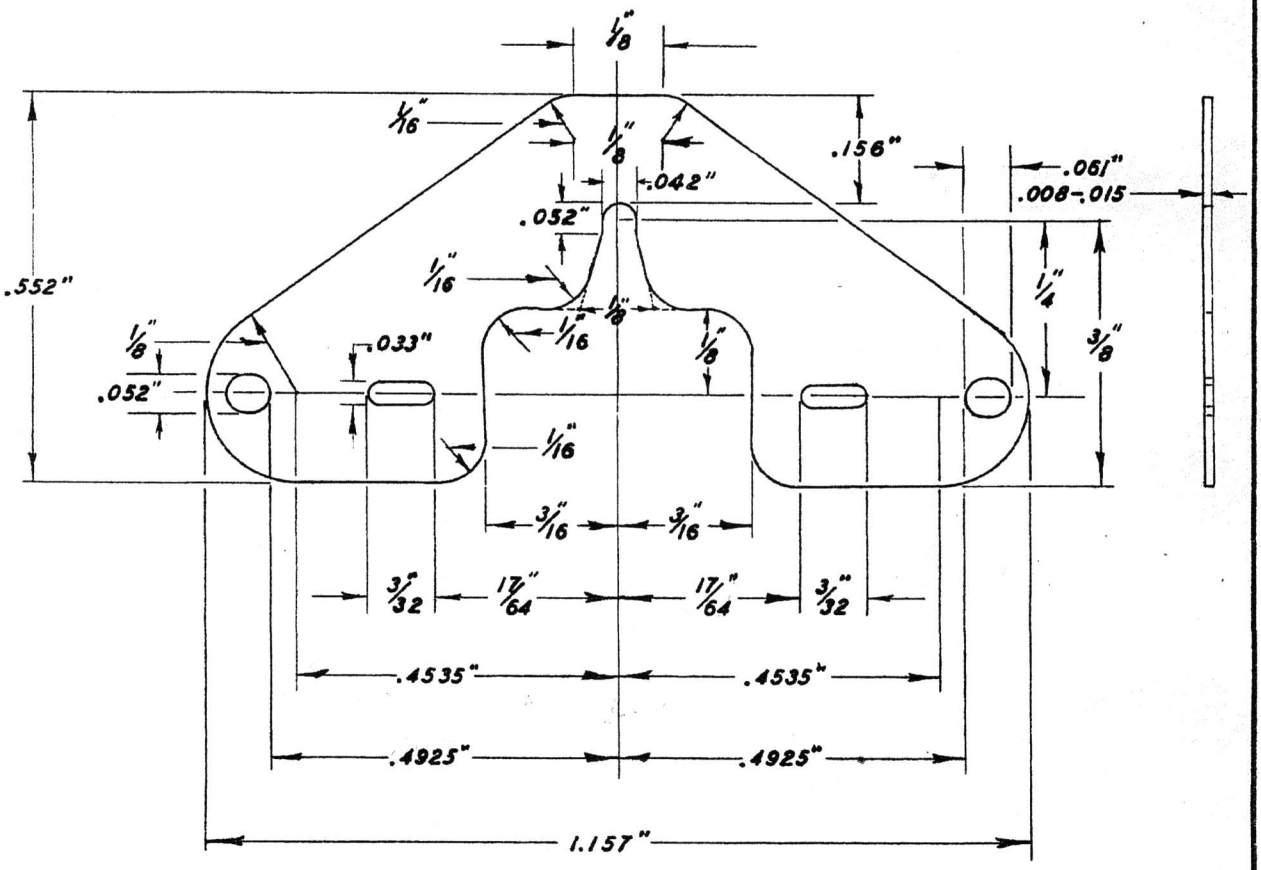

Ahwf 6/24/30

MATERIAL SPECIFICATIONS

1. Nº 1 WHITE ELECTRICAL MICA ---------- STDZG. NOTICE Nº 33C-M-1

★ INDICATES A CHANGE

ALL DIMENSIONS IN
UNLESS OTHERWISE SHOWN
6-109

SCALE— 4:1

DRAWING No.

6-109

SECTION— CONSTRUCTION DATA
SUBJECT— SPEC. FOR MISC. PARTS FOR R.C.A. RADIOTRON Nº 201-A AND CUNNINGHAM Nº CX-301-A

STANDARDIZING NOTICE No. 3-1-201-A
SUPERSEDES p. DATED

R-2 MICA DISC CLIP

TUBE PART Nº 6.

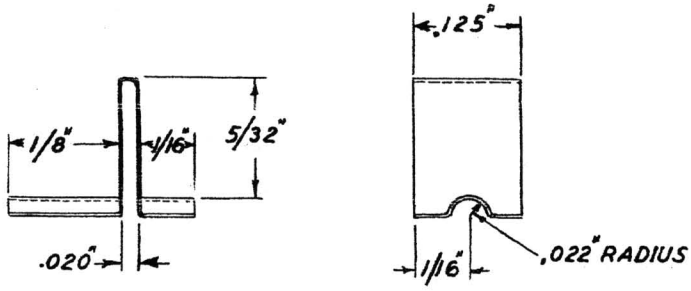

SCALE — 5:1

MATERIAL SPEC. - - - - - - - - .005" GRADE 'A' NICKEL RIBBON STDZG. NOTICE Nº 33C-N-7
TREATMENT
1. HYDROGEN CLEANING SCHEDULE 34-1-1
(A). TIME - - - - - - - - HEATED 3 MIN. - - - COOLED 3 MIN.

FILAMENT TENSION SUPPORT

TYPE 3.5-10B7 TUNG.
TUBE PART Nº 7

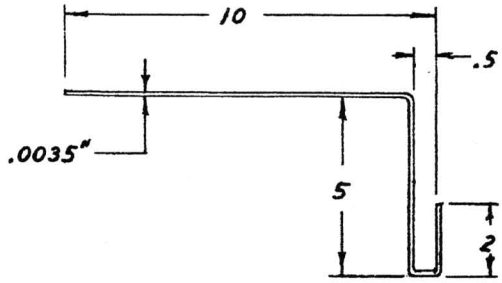

SCALE: 5:1

6/24/30

★ INDICATES A CHANGE
ALL DIMENSIONS IN MM. UNLESS OTHERWISE SHOWN
6-109

SCALE— AS SHOWN

DRAWING No. 6-109

GETTER

1. Type - - - - - - - - - - - - - - - - - - No. 15C-20-2.
2. Quantity per tube
   (a) One drop of getter shall be applied to each side of the plate.

APPLICATOR

1. A steel rod formed to the dimensions here given is especially recommended for use in applying getter.

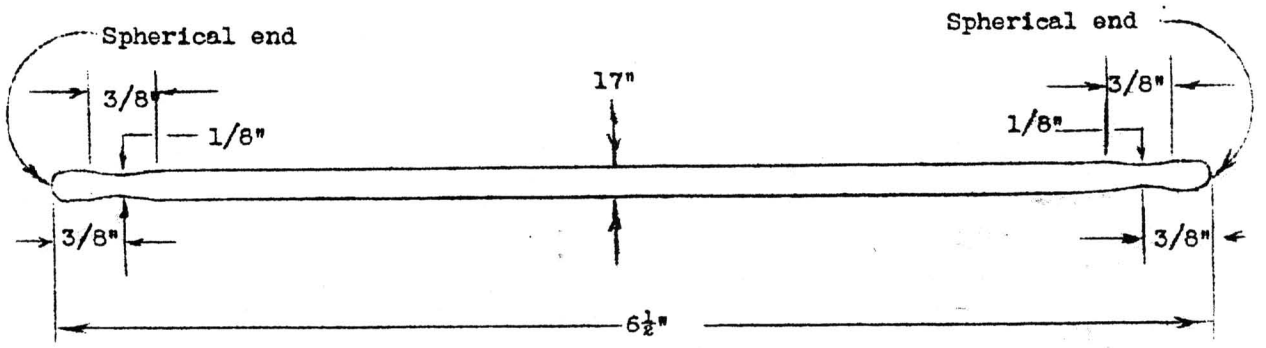

APPLICATION

1. Consistency of Getter Paste.
   The getter should be thoroughly stirred and thinned with amyl acetat to the proper consistency. The proper consistency for the paste is mixture that strings out when the rod is withdrawn without running i drops. When applied, the paste should not flow on the edge of the plate, nor should it be lumpy.
2. Location.
   One drop of paste should be applied to the center of the right hand plate channel on each side of the plate as shown on page 4 of this Standardizing Notice.
3. Mounts after having the getter applied should stand for two hours, unt paste is dry, before being exhausted.

AWF 6/24/30

SECTION— Construction Data
SUBJECT— Bulb & Bulb Marking and Basing Spec. for RCA Radiotron No.201-A & No.CX-301-A.

STANDARDIZING NOTICE No. 3-1-201-A
SUPERSEDES p. DATED

BULB AND BULB MARKING SPECIFICATIONS

Tube Part No. 9 - Bulb

1. Type - S14S2
2. Kind of glass- No.8 Lime Glass
3. Bulb Manufacturing Specifications- - - - - - - - - - - - Stdzg. Notice No.17-7-2

Bulb Marking Specifications

1. Monogram Design
   (a) RCA Radiotron No.201-A- - - - - - - - - - - 7/16" Reverse RCA Monogram
   (b) Cunningham No.CX-301-A- - - - - - - - - - - 7/16" Reverse C Monogram
2. Monogram Design Specifications - - - - - - - - - - - - - Stdzg.Notice No.27-1-3
3. Location of Marking- - - - - - - - - - - - - - - - - - - Inside Top center of bulb
4. Application
   (a) Apply marking as specified in Standardizing Notice No. 27-1-3

BASING SPECIFICATIONS

Tube Part No. 10 - Base

1. Type - No. 3302-A
2. Base Mfg. Specifications - - - - - - - - - - - - - - - - Stdzg.Notice No.24-1-1

Base Marking Specifications

1. Marking Design
   (a) RCA Radiotron No. 201-A - - - Design RCA-2 Stdzg. Notice No.27-1-1A
   (b) Cunningham No. CX-301-A - - - Design C -2 Stdzg. Notice No. 27-1-1B
2. Application
   (a) Locate and apply marking as specified in Stdzg.Not.Nos.27-1-1,27-1-1A and 27-1-1B.

Tube Part No. 11 - Basing Cement

1. Cement - Nos. 5 or 862
2. Cement formula spec. - -
   (a) No. 5 - Stdzg.Notice No.24-2-5
   (b) No. 862 - Stdzg.Notice No.24-2-1

Tube Part No. 12- Contact Pin Solder

1. Solder Specifications- - - - - - - - - - - Pure Tin Stdzg.Not.No. 24-4-1.

Base Threading Sepcifications - - - - - - - - - - - - - - - - - - - Stdzg.Notice No. 24-1-2
For Tube types. RCA Radiotron No. 201-A and Cunningham No. CX-301-A.

Approved 6/24/30

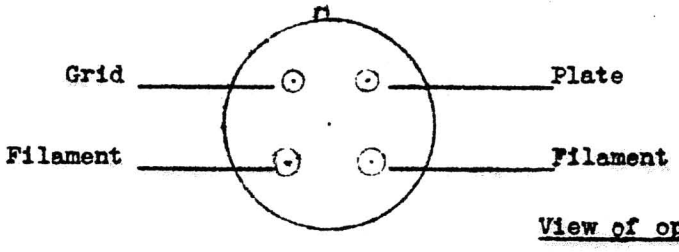

View of open end of base.

★ INDICATES A CHANGE
★★ INDICATES AN ADDITION

SEALING AND EXHAUST SPECIFICATIONS

1. Sealex Exhaust - Schedule 19-1-12
   (a) Speed - 600-720 tubes per hour.

AGING SPECIFICATIONS

Aging Schedule	E_f	#E_b	E_c		Time Minutes
1. Gas	10 A.C.	125	Floating(singly)		6
2. High filament	15 A.C.	Floating(Tied together)	"	"	3
3. Low filament	8 A.C.	Floating(Tied together)	"	"	5
Reaging for Low Emission (900)					
1st.	16A.C.	Floating(Tied together)	Floating(singly)		1
2nd.	8A.C.	200 DC	"	"	5
3rd.	16A.C.	Floating(Tied together)	"	"	1
4th.	8A.C.	" " "	"	"	5
Reaging for Gas (104)					
1st.	15 A.C.	Floating(Tied together)	Floating(singly)		1
2nd.	8.5 A.C.	200 D.C.	"	"	5
3rd.	8 A.C.	Floating(Tied together)	"	"	10

Line voltage with one 200 W - 115 Volt Mazda lamp in series with plate of 25 tubes in parallel.

Approved 6/24/30

FACTORY ELECTRICAL RATINGS AND TEST SPECIFICATIONS

Factory Routine Tests

1. Gas Test - Taken on 100% of production.
   - (a) Filament Volts, E_f, adjusted to give grid current - I_g = 5 m.a.
   - (b) Plate Volts - E_p = -22.5 DC
   - (c) Grid Volts- E_g = +60 DC
   - (d) Read plate current- - - - - - - - - - - - - - - - - - I_p = 2.0 microamp(max.

2. Emission Check - Taken on 100% of production.
   - (a) Filament Volts, E_f, adjusted to give grid current - I_g = 5 m.a.
   - (b) Plate Volts - E_p = -22.5 DC
   - (c) Grid Volts- E_g = +60 D.C.
   - (d) Read filament volts - - - - - - - - - - - - - - - - - - E_f = 3.7 DC.(max.)

3. Plate Current Test - - - - - - - - - - - - - - - - - Taken on 100% of production.
   - (a) Filament Volts- E_f = 5.0 DC
   - (b) Plate Volts - E_p = 90 DC
   - (c) Grid Volts- E_g = -4.5 DC
   - (d) Read plate current- - - - - - - - - - - - - - - - - - I_p = 2.4(1.5-3.3)m.a.

Occasional Tests

Tests for the following tube characteristics should occasionally be made under electrical conditions as here specified.

	Test Conditions			
	E_f	E_p	E_g	I_g
1. Leakage (grid - - - - - I_g = 1.0 microamp.(max.) - - -	0	-22.5	+60	- -
2. Filament Current- - - - I_f = .25(.237-.262)amp.- - - -	5.0DC	0	0	- -
3. Amplification Factor- - u = 8.2(7.2-9.4)- - - - - - -	5.0DC	90	-4.5	- -
4. Plate Resistance- - - - rp = 11300(8500-15500)ohms - -	5.0DC	90	-4.5	- -
5. Mutual Conductance- - - gm = 725(575-850)micromhos - -	5.0DC	90	-4.5	- -
6. Input Resistance- - - - I_g = 7(2-12) microamps - - - -	5.0DC	40	+1.0	- -

7. Effective Grid-plate capacitance = 8.1(7.6-8.6) mmf.

ETD-FRI-8-23-28

PACKING SPECIFICATIONS- - - - - - - - - - - - - - - - - - Page 7b Stdzg. Notice No.29-0-2.

Approved 6/24/30

STANDARDIZING DEPT.

SECTION—Construction Data
SUBJECT—Consolidated List of Parts & Materials for RCA Radiotron 201-A & Cunningham CX-301-A.

STANDARDIZING NOTICE No. 3-1-201-A
SUPERSEDES p. DATED

Tube Part No.	Part Description	Part Specification	Qty. per tube	Descriptive Stdzg. Not. No.
1	Stem			
1A	Flange Tubing	No. 41&42 Bl Glass	33mm.	10-1-1A
1B	Exhaust Tubing	No.18 Bl or Bl2 Glass	99mm.	10-1-1A
1C	Weld-Plate Lead	164D-2060-4049 Ni tip	1	11-1-2
1D	Weld-Grid Two Part	164D-3024 Ni tip	1	11-1-2
1E	Weld-Fil.& Grid Lead	164D-2067-3024 Ni tip	3	11-1-2
1F	Weld-Two Part	164D-4049-Ni tip	2	11-1-2
2	Filament-Tung."V"wire	Wt.limits 4.9-5.0 mgs/200mm	53.5mm.	14C-1-2
3	Grid			
3A	Grid wire Nickel-Chromimum	Wt.limits 20.7-22.8 mgs/200mm.	1120mm	3-1-201-A
3B	Grid Side Rod	30-32Al(Dead Soft)Nickel	2	3-1-201-A
4	Plate	Type P-60 (Nickel)	1	3-1-201-A
5	Mica Spacer	Type IM-4	1	3-1-201-A
6	Mica Spacer Clip	Type R-2	1	3-1-201-A
7	Filament Tension Support	Type 3.5-10B7 Tung.	1	3-1-201-A
8	Getter	Type 15C-20-2		15C-20-2
9	Bulb	Type S14S2(No.8 Lime Glass)	1	17-7-2
10	Base	Type 3302-A	1	24-1-1
11	Basing Cement	No. 5 or 862		3-1-201-A
12	Contact Pin Solder	Pure Tin		24-4-1
13	Packing	Page 7b		29-0-2

HWF 6/24/30

STANDARDIZING DEPARTMENT.

★ INDICATES A CHANGE
★★ INDICATES AN ADDITION

RCA Radiotron Company, Inc.

415 S. Fifth St., HARRISON, N. J.

DATE— Apr. 26, '33

STANDARDIZING SECTION
RESEARCH AND DEVELOPMENT LAB.

SUBJECT— INDEX (STANDARD SPECIFICATIONS)
TUBE TYPE 10

STANDARDIZING NOTICE No. 3-1-10

SUPERSEDES

P.	DATED
P.0 (3-1-210)	Dec. 5, '31
P.1 (3-1-210)	Nov. 15, '31
P.3a(3-1-210)	Jan. 10, '32

Incorporated in the succeeding pages of this Standardizing Notice are Standard specifications for the manufacture of Tube Type 10.

SPECIAL MOUNTING INSTRUCTIONS

1. Treatment of Stem Press to prevent leakage
   After assembly of mount is completed brush top of stem press with a solution of 25% Barium Carbonate and water.
2. Care should be taken to keep the dumet plate lead from looping up near the getter tab as burning occurs during exhaust.

ESSENTIAL TECHNICAL DATA

1. TUBES - Radiotron RCA-210
Cunningham CX-310

2. CARTON RATINGS
   - (a) Filament Volts - 7.5 AC
   - (b) Filament Amperes - 1.25
   - (c) Plate Volts(max.)- 425
   - (d) Grid Bias Volts- -39

3. PUBLISHED CONSTANTS - AUDIO AMPLIFIER

(a) Filament Volts	7.5 AC	7.5 AC	7.5 AC
(b) Plate Volts	425 DC	350 DC	250 DC
(c) Grid Volts	-39	-31	-22
(d) Amplification Factor	8	8	8
(e) Plate Resistance - - - (ohms)	5000	5150	6000
(f) Mutual Conductance - - (micromhos)	1600	1550	1330
(g) Plate Current- - - - - (m.a.)	18	16	10
(h) Load Resistance- - - - (ohms)	12000	11000	13000
(i) Undistorted Power Output(milliwatts)	1600	900	400

4. DESIGN CONSTANTS

		TEST CONDITIONS E_f	E_p	E_g	I_p ma.
(a) Amplification Factor - u	= (7.0-9.0)	7.5 DC	425	-35	-
(b) Plate Resistance - - - rp	= (3500-6500)ohms	7.5 DC	425	-35	-
(c) Mutual Conductance - - Gm	= (1300-2000)micromhos	7.5 DC	425	-35	-
(d) Filament Current - - - I_f	= 1.16-1.34 amperes	7.5 DC	0	0	-
(e) Plate Current- - - - - I_p	= 11.0-26.0 m.a.	7.5 DC	425	-35	-

5. E.T.D. LIMITS

(a) Filament Current - - - I_f	= 1.25(1.16-1.34)amps.	7.5 DC	0	0	-
(b) Emission - - - - - - - I_s	= 90 m.a.(min.)	6.0 DC	100	100	-
(c) Gas(End 2 min.)- - - - I_g	= 12 microamps(max.)	7.5 DC	425	- -	50
(d) Leakage(grid)- - - - - I_g	= 4 microamps(max.)	0	425	As in gas test	
(e) Plate Current- - - - - I_p	= 18.5(11.0-26.0)m.a.	7.5 DC	425	-35	-
(f) Amplification Factor - u	= 8.0(7.0-9.0)	7.5 DC	425	-35	-
(g) Plate Resistance - - - rp	= 5000(3500-6500)	7.5 DC	425	-35	-
(h) Mutual Conductance - - gm	= 1600(1300-2000)micromhos	7.5 DC	425	-35	-

6. FACTORY TEST SPECIFICATIONS - - - - - - - - - - - - - - - - - Pages 18 and 19.

7. LIFE TEST SPECIFICATIONS- - - - - - - - - - - - - - - - - - - Stdzg.Notice 26-2-210

8. PHYSICAL DIMENSIONS

		mm	inches
(a) Overall Length - - - - - - - -	Mfg. Av.	134(130-138)	5 9/32(5 1/8 - 5 7/16)
	*Radio Inspection	130-138	5 1/8 - 5 7/16
	Published	143 max.	5 5/8 max.
(b) Sealing Length - - - - - - - - - - - - - -		104	
(c) Seal Inserted into base- - - - - - - - -		13	

★ INDICATES A CHANGE
★★ INDICATES AN ADDITION

RCA Radiotron Company, Inc.
415 S. Fifth St., HARRISON, N. J.
STANDARDIZING DEPT.

SECTION—Construction Data
SUBJECT—COMPLETE TUBE ASSEMBLY
RCA RADIOTRON RCA-210 & CUNNINGHAM CX-310

STANDARDIZING NOTICE No. 3-1-210
SUPERSEDES p. 3 DATED Sept. 15, '30

COMPLETE TUBE ASSEMBLY

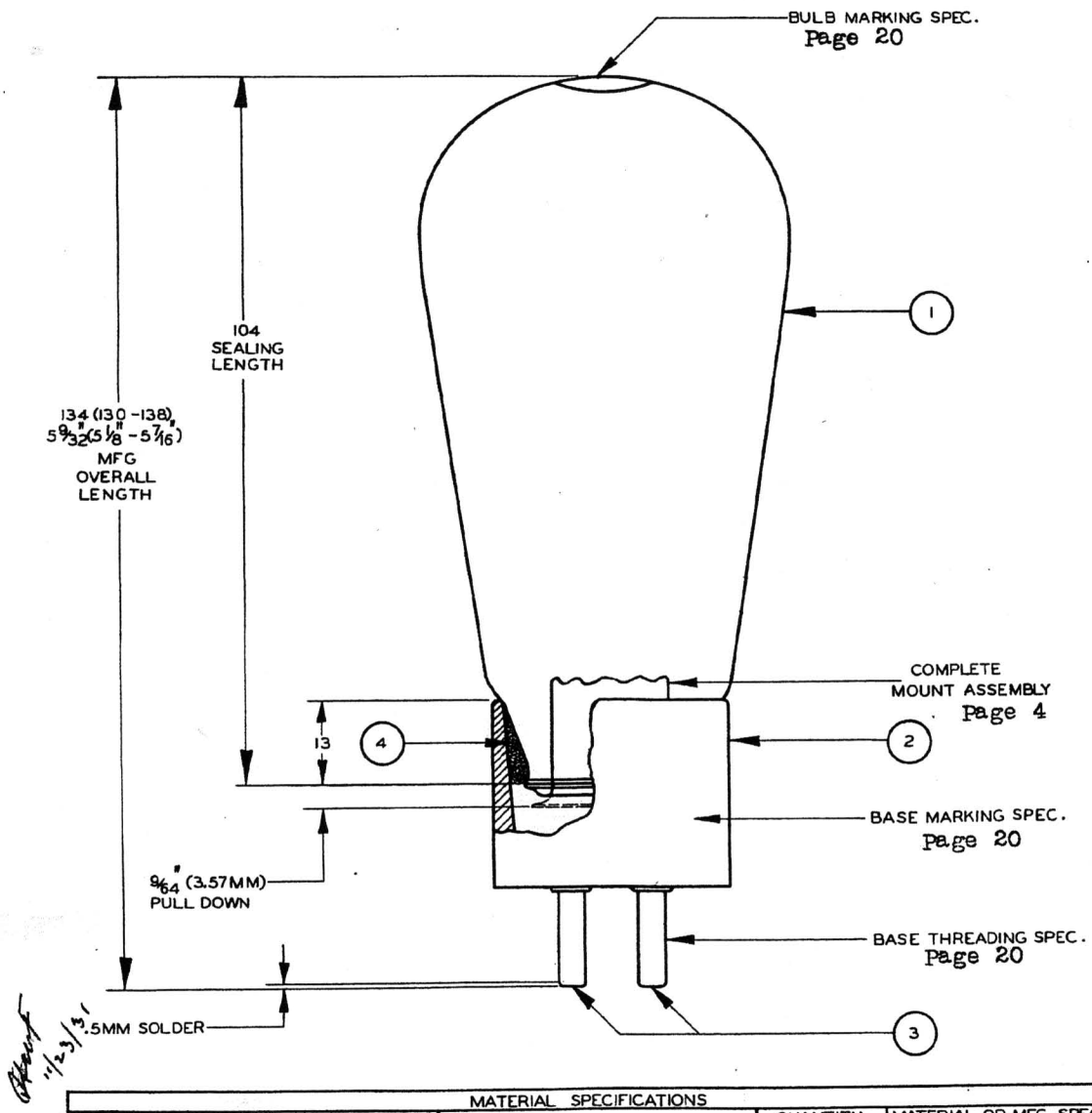

11/23/31

MATERIAL SPECIFICATIONS

TUBE PART Nº	PART DESCRIPTION	PART SPECIFICATION	QUANTITY PER TUBE	MATERIAL OR MFG. SPEC. STDZG. NOTICE NUMBER
1	BULB	S17S1 OR S17S2 (Nº 8 LIME GLASS)	1	17 - 7 - 2
2	BASE	Nº 3302-A	1	24 - 1 - 1
3	CONTACT PIN SOLDER	PURE TIN	—	33C - S - 3
4	BASING CEMENT	Nº 5	—	24 - 2 - 5

REVISIONS.
R1 - 11/3/31 ---------- OPTIONAL BULB SPEC. ADDED.

★ INDICATES A CHANGE
ALL DIMENSIONS IN MM
UNLESS OTHERWISE SHOWN

SCALE— 1:1

DRAWING No 91S - 379 R1

SUBJECT— COMPLETE TUBE ASSEMBLY
TUBE TYPE 10

STANDARDIZING NOTICE No. 3-1-10
(3-1-210)
SUPERSEDES p. 4 DATED Nov. 15, '31

COMPLETE MOUNT ASSEMBLY

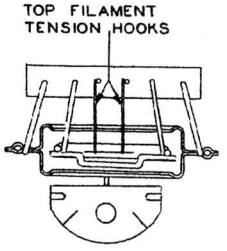

IMPORTANT
FOR SPECIAL MOUNTING INSTRUCTIONS SEE PAGE 1

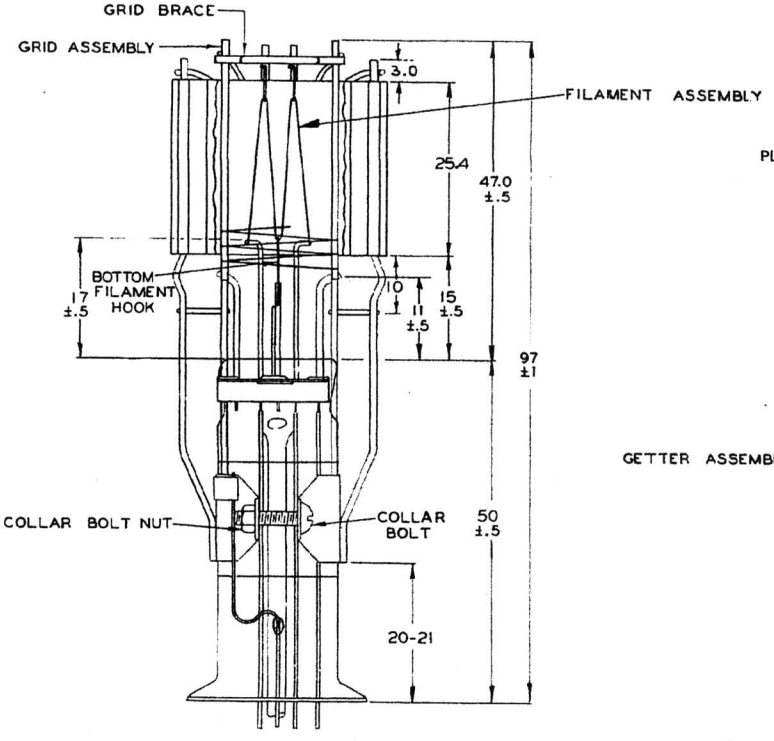

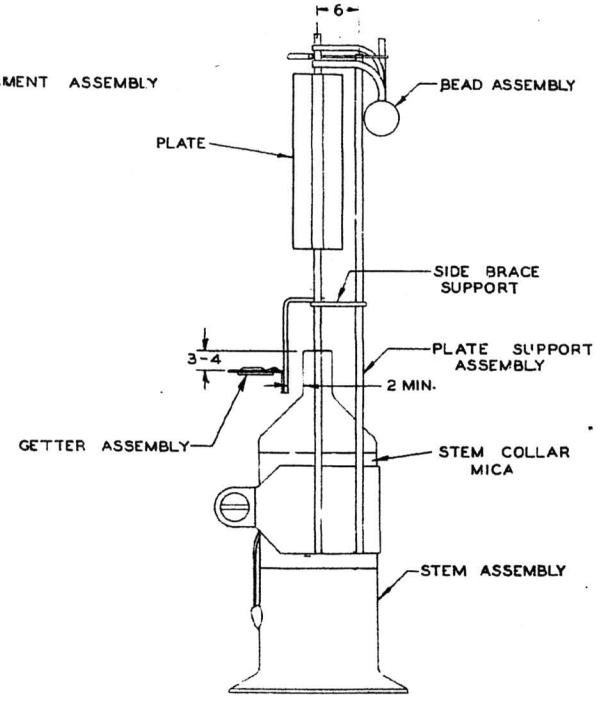

TREATMENT OF BOLT & NUT BEFORE MOUNTING
1. FIRED IN HYDROGEN ---------- STDZG. NOTICE № 13-5-1

TREATMENT OF FINISHED MOUNT
1. FILAMENT CARBONIZING SCHEDULE ---------- PAGE 4A

NOTE:- R2 & R3 USED FOR DEV. TUBES

NOTE:- FOR ALL PARTS AND ASSEMBLY DESIGNATIONS SEE PARTS LIST

REVISIONS
★ R4 5-31-33 MOUNT HEIGHT, GETTER & PLATE CHANGED PART NUMBERS REMOVED.

★ INDICATES A CHANGE

ALL DIMENSIONS IN MM
UNLESS OTHERWISE SHOWN

SCALE— 1:1

DRAWING No. 92S-392 R4

3-334-20-7

RFS926-82

Form 91 R2 500 7-30 (N6272)

RCA Radiotron Company, Inc.

415 S. Fifth St., HARRISON, N. J.

STANDARDIZING DEPT.

PAGE No.— 5

DATE— SEPT. 15, 1930

Recalled 4/26/33

SECTION— CONSTRUCTION DATA

SUBJECT— STEM SPECIFICATIONS
RADIOTRON RCA-210 & CUNNINGHAM CX-310

STANDARDIZING NOTICE No. 3-1-210 X

SUPERSEDES p. DATED

SUB ASSEMBLY A

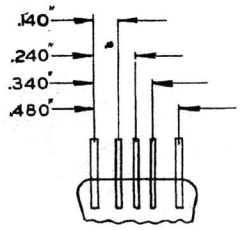

INNER LEAD SPACING
USE WELD CUP Nº 221

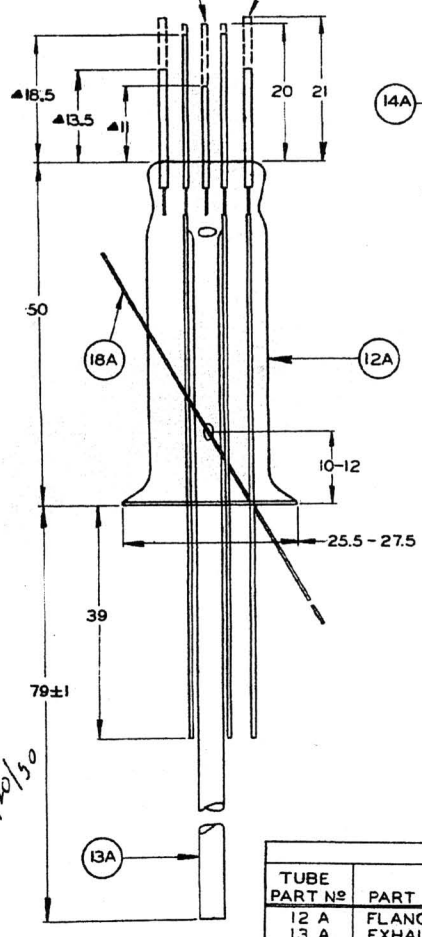

SCALE: 1:1

▲ INDICATES TRIMMED LENGTH

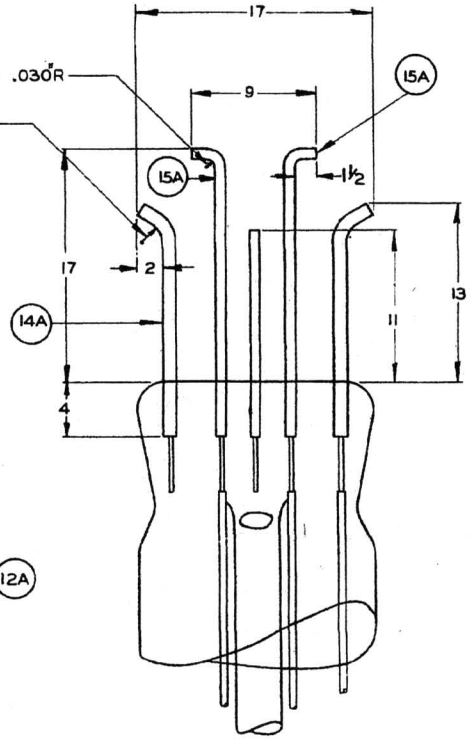

SCALE: 2:1

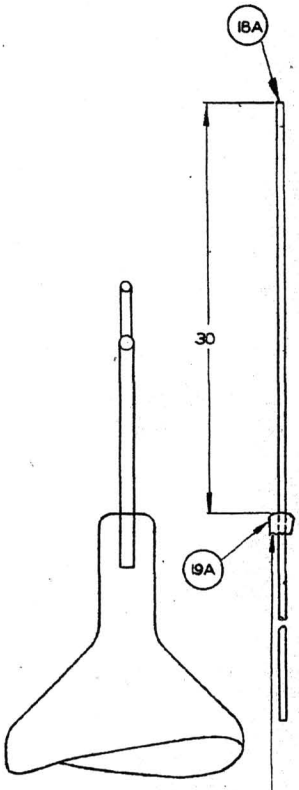

WRAP AS SPECIFIED IN STDZG. NOTICE Nº 12-5-1

MATERIAL SPECIFICATIONS			
TUBE PART Nº	PART DESCRIPTION	QUANTITY PER TUBE	PART SPECIFICATION
12 A	FLANGE TUBING	50 MM	Nº A 42 B12 GLASS
13 A	EXHAUST TUBING	120 MM	Nº 18B1 OR B12 GLASS
14 A	GRID TWO PART WELD	1	164D-4025 NI TIP
15 A	FILAMENT LEADS	2	164D-2081-3024 NI TIP
16 A	CENTER SUPPORT	1	164D-3024 NI TIP
17 A	GRID LEAD	1	164D-2081-4025 NI TIP
18 A	PLATE LEAD	1	1690D
19 A	LEAD WRAPPING TUBING	12 MM	Nº 9 OR 10 B1 GLASS

★ INDICATES A CHANGE

ALL DIMENSIONS IN MM
UNLESS OTHERWISE SHOWN

SCALE— AS SHOWN

DRAWING No 91S-380

8-109

6-109

AGING SPECIFICATIONS

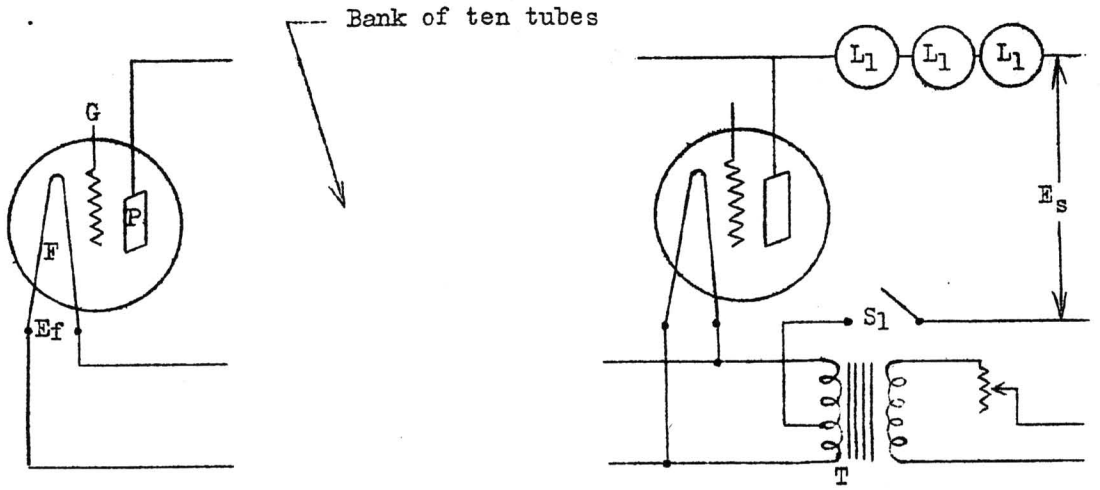

LEGEND

F Filament
G Grid
P Plate
E_s Plate Voltage Supply 750 Volts DC
S_1 S.P.S.T. Switch
L_1 300 W. - 250 V. Mazda C Lamps
T Filament Voltage Supply Transformer - Secondary Voltage to be adjustable between 0 and 20 volts
E_f Filament Voltage

SCHEDULE

Regular	E_f Volts AC	S_1	Time Minutes
1	11.0	Open	2
2	16.0	Open	1
3	11.0	Open	5
4	6.0	Closed	10
5	11.0	Open	1/4
6	16.0	Open	2
7	11.0	Open	12

Reaging for Low Emission
Repeat steps 5, 6 and 7.

Reaging for Gas
Repeat steps 4, 5, 6 and 7.

Reaging for Leakage
None

*No change in spec.
notice revised.

STANDARDIZING SECTION
RESEARCH AND DEVELOPMENT LAB.

STANDARDIZING NOTICE No. 3-1-10

SUBJECT– CONSOLIDATED LIST OF TUBE PARTS & MATERIALS
TUBE TYPE 10

SUPERSEDES p. 7 DATED May 26, '33

Stdzg. Notice Reference	Part Description	Part Designation	Q'ty per Tube	Quantity per 1000 Tubes
	1. BULB			
17-7-2	Bulb	S17S1 or S2 (No. 8 Lime)	1	1000
	2. BASE			
24-1-1	Base	3302-A	1	1000
24-2-6	Basing Cement	No. 6	–	8.50 lb.
	3. STEM			
12-1-0	Stem Assembly	FS-145 (Weld Cup WC-42)		
10-1-1A	Flange Tubing	No.42B only No. 12 Glass	53mm	21.30 lb
10-1-1A	Exhaust Tubing	No.18 No. 12 Glass	120mm	4.53 lb.
10-1-1A	Lead Wrapping Tubing	No. 9 or 10 No. 12 Glass	12mm	.20 lb.
11-1-1	Plate Lead	1690D	1	1000
11-1-1	Center Spud	164D-3024 Ni.	1	1000
11-1-1	Grid Spud	164D-4025 Ni.	1	1000
11-1-1	Filament Leads	164D-2081-3024 Ni.	2	2000
11-1-1	Grid Lead	164D-2081-4025 Ni.	1	1000
	4. FILAMENT AND CATHODE			
13-1-1A	Filament Assembly	PF-1		
14C-1-2	Wire Tungsten "V"	38(37.6-38.4)mg/200mm	86.5mm	86.5m
	5. GRIDS			
8-1-1	Grid Assembly	FG-2309		
33C-M-13	Grid Wire Mo.	26.75(26.0-27.5)mg/200mm	700mm	700m
33C-N-5	Grid Side Rods	40 mil Ni. Wire	71.4mm	1.121 lb.
	6. PLATE			
13-1-2	Plate Support Assembly	FM-125	1	1000
	7. GETTER			
15-1-1	Getter Assembly	FZ-54		
15-1-0	Getter Pellet	Z-5	1	1000
13-1-1A	Getter Tab	R-72	1	1000
13-1-1A	Getter Tab Support	W-83	1	1000
13-1-1A	Getter Mesh Strap	L-1	1	1000
	8. MICA			
13-1-1A	Stem Flange Mica	IM-5	1	1000
	9. MISCELLANEOUS SUPPORTS			
→ 13-1-1	Filament Tension Hook	*8-12B8 Tungsten	2	2000
13-1-1A	Grid Brace	W-32	1	1000
13-1-1	Filament Anchor	10-12D5 Molybdenum	1	1000
–	Collar Bolt	1/2" No.3-48 Round Head Iron Machine Screw	1	1000

SUBJECT— CONSOLIDATED LIST OF TUBE PARTS & MATERIALS
TUBE TYPE 10

SUPERSEDES p. 7a DATED Apr. 26, '33

Stdzg. Notice Reference	Part Description	Part Designation	Q'ty per Tube	Quantity per 1000 Tubes
	9. MISCELLANEOUS SUPPORTS (Cont'd)			
-	Nut	No. 3-48 Iron Hexagon	1	1000
	10. MISCELLANEOUS MATERIAL			
13-1-3	Bead Assembly	625-B		
10-1-1A	Bead Cane Glass	No. 23 No. 7(G702P) Glass	25mm	2.80 lb.
13-1-1	Bead Anchors	30-25A4 Ni.	4	4000
13-1-1	Bead Anchors	40-25A4 Ni.	2	2000
33C-S-3	Contact Pin Solder	Pure Tin	-	.50 lb.
27C-1-1	Monogram Enamel	-	-	-
→ 29-0-0 Page 1	**11. PACKING			
	For packing procedure see packing index, Stdzg. Notice No. 29-0-0 page 1.			

*INDICATES A CHANGE

RCA Radiotron Company, Inc.

415 S. Fifth St., HARRISON, N. J.

STANDARDIZING DEPT.

SECTION— Construction Data
SUBJECT— Index to Specifications
Radiotron RCA-245 & Cunningham CX-345

STANDARDIZING NOTICE No. 3-1-245
All of Notice No. VT3-2-22
SUPERSEDES p. ^ DATED

Incorporated in the succeeding pages of this Standardizing Notice are the complete specifications for the manufacture of Radiotron RCA-245 & Cunningham CX-345.

RC Radiotron Company, In

415 S. Fifth St., HARRISON, N. J.

STANDARDIZING DEPT.

SECTION—Construction Data
SUBJECT—ESSENTIAL TECHNICAL DATA
RADIOTRON RCA-245 & CUNNINGHAM CX-345.

STANDARDIZING NOTICE No.3-1-245

SUPERSEDES p. DATED

1. TUBES- Radiotron RCA-245
Cunningham CX-345

2. CARTON RATINGS

(a) Filament Volts- -	2.5
(b) Filament Amperes- -	1.5
(c) Plate Volts -	250 (max.)
(d) Grid Bias Volts -	-50

3. PUBLISHED CHARACTERISTICS

(a) Filament Volts- -	2.5	2.5
(b) Plate Volts -	180	250
(c) Grid Volts- -	-34.5	-50
(d) Amplification Factor- - - - - - - - - - - - - - - - - - -	3.5	3.5
(e) Plate Resistance- - - - - - - (ohms)- - - - - - - - - -	1900	1750
(f) Mutual Conductance- - - - - - (micromhos) - - - - - - -	1850	2000
(g) Plate Current - - - - - - - - (m.a.)- - - - - - - - - -	27	34
(h) Load Resistance - - - - - - - (ohms)- - - - - - - - - -	3500	3900
(i) Undistorted Power Output- - - (milliwatts)- - - - - - -	780	1600
(j) Interelectrode Capacities		
(1) Grid - Plate - - - - - - - (μμf.) - - - - - - - - - -	8	
(2) Grid - Filament- - - - - (μμf.) - - - - - - - - - -	5	
(3) Plate - Filament - - - - (μμf.) - - - - - - - - - -	3	

	TEST CONDITIONS		
	E_f D.C.	E_p D.C.	E_g D.C.
4. DESIGN LIMITS			
(a) Filament Current- - - - - I_f = 1.35-1.65 amps.- - - -	2.5	0	0
(b) Amplification Factor- - - μ = 3.15-3.85- - - - - - -	2.5	250	-50
(c) Plate Resistance- - - - - r_p = 1350-2400 ohms - - - -	2.5	250	-50
(d) Mutual Conductance- - - - g_m = 1450-2450 micromhos- -	2.5	250	-50
(e) Plate Current - - - - - - I_p = 20-43 m.a. - - - - - -	2.5	250	-50
5. E T D LIMITS			
(a) Filament Current- - - - - I_f = 1.50(1.35-1.65)amps. -	2.5	0	0
(b) Amplification Factor- - - μ = 3.50(3.15-3.80)- - - -	2.5	250	-50
(c) Plate Resistance- - - - - r_p = 1750(1350-2300)ohms- -	2.5	250	-50
(d) Mutual Conductance- - - - g_m = 2000(1550-2450) micromhos	2.5	250	-50
(e) Plate Current - - - - - - I_p = 31(20-40) m.a. - - - -	2.5	250	-50
(f) Emission Test - - - - - - I_s = 85 m.a. (min.) - - - -	2.5	+50	+50
(g) Gas(1 megohm grid leak) - I_g = 10 microamps (max.)- -	2.5	250	-50
(h) Leakage (grid)- - - - - - I_g = 2.0 microamps (max.) -	0	250	-50
(i) A.C.Amplification - - - - - - - - - - - - - - - - - - -	2.5	250	-50

(1) Load Impedance = 2000 ohms
(2) Power Factor = .707
(3) Signal Voltage = 35 R.M.S.
(4) Rejection Voltage = 56 R.M.S.

1/21/31

6. FACTORY TESTS

(a) Specifications for Factory Tests are given on pages 19 and 20.

7. PHYSICAL DIMENSIONS

		mm	inches
(a) Overall Length - - - - - - - - - - - - -	-Mfg.Av.	130.2-138.1	5 1/8-5 7/16
	Radio Inspection	128.6-139.7	5 1/16-5 1/2
	Published (max.)	142.9	5 5/8
(b) Sealing Length - - - - - - - - - - - - - - - -		104	
(c) Seal inserted into base		13	

RCA Radiotron Company, Inc.

415 S. Fifth St., HARRISON, N. J.

STANDARDIZING DEPT.

DATE— JAN. 10, 1931

SECTION— CONSTRUCTION DATA

STANDARDIZING NOTICE No. 3 - 1 - 245

SUBJECT— COMPLETE TUBE ASSEMBLY

RADIOTRON RCA-245 & CUNNINGHAM CX-245 SUPERSEDES p. DATED

COMPLETE TUBE ASSEMBLY

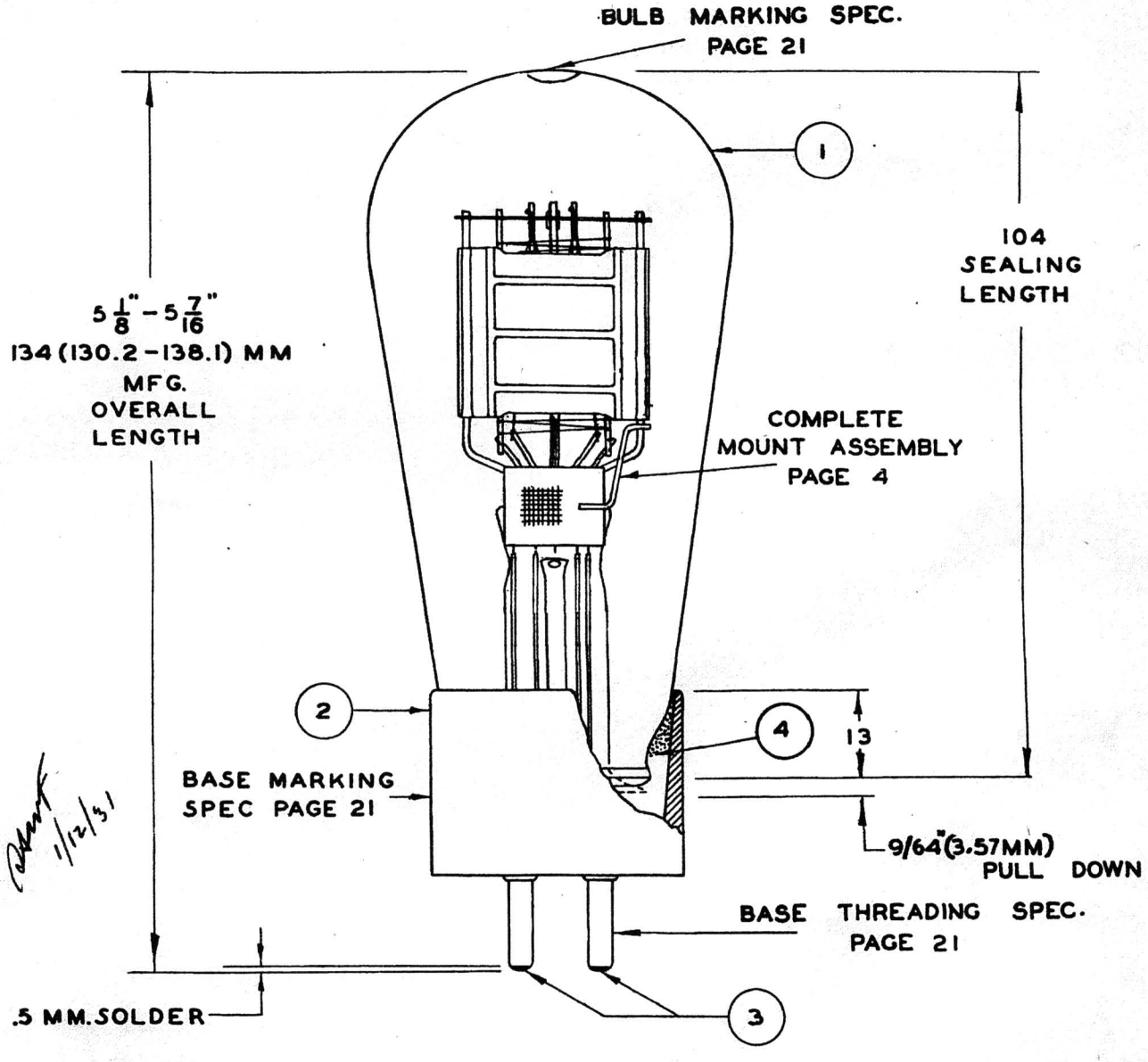

Approved 1/12/31

MATERIAL SPECIFICATIONS

TUBE PART No.	PART DESCRIPTION	PART SPECIFICATION	QUANTITY PER TUBE	MAT. OR MFG. SPEC. STDZG NOTICE No.
1	BULB	TYPE No. 51751	1	-17 - 7 - 2
2	BASE	TYPE No 3306-A	1	24 - 1 - 1
3	CONTACT PIN SOLDER	PURE TIN	—	33C - 5 - 3
4	BASING CEMENT	No. 5	—	24 - 2 - 5

★ INDICATES A CHANGE

ALL DIMENSIONS IN MM UNLESS OTHERWISE SHOWN

SCALE— 1 : 1

DRAWING No 915 - 3204

RCA Radiotron Company, Inc.

415 S. Fifth St., HARRISON, N. J.

DATE— JAN. 10, 1931

STANDARDIZING DEPT.

SECTION— CONSTRUCTION DATA

STANDARDIZING NOTICE No. 3-1-245

SUBJECT— COMPLETE MOUNT ASSEMBLY
RADIOTRON RCA-245 & CUNNINGHAM CX-345

SUPERSEDES p.

DATED

COMPLETE MOUNT ASSEMBLY

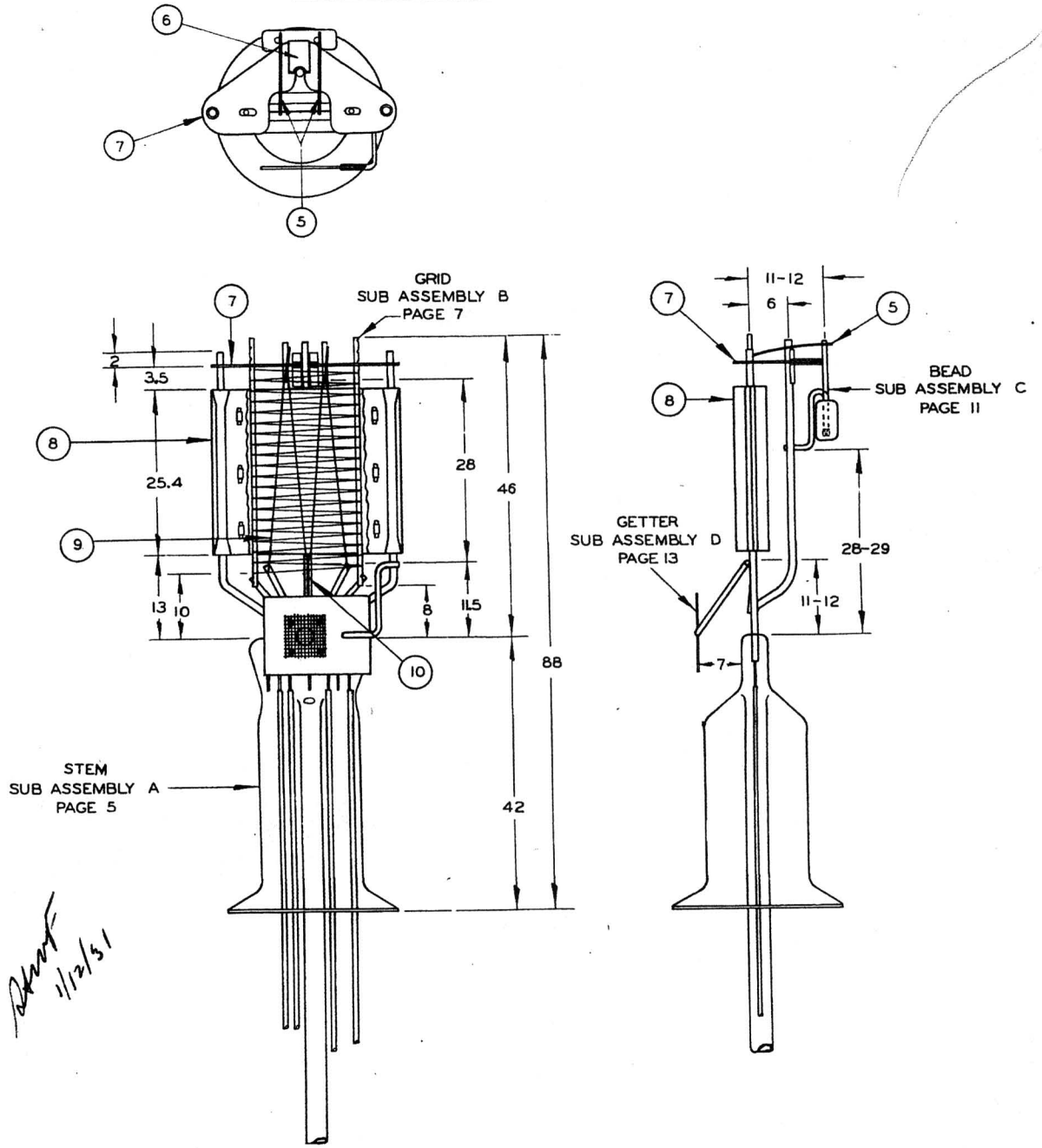

Approved 1/12/31

MATERIAL SPECIFICATIONS				
TUBE PART Nº	PART DESCRIPTION	PART SPECIFICATION	QUANTITY PER TUBE	MAT. OR MFG. SPEC. STDZG. NOTICE Nº
5	TOP FILAMENT HOOKS	PAGE 12	2	3-1-245
6	MICA DISC CLIP	PAGE 10	1	3-1-245
7	MICA SPACER	PAGE 9	1	3-1-245
8	PLATE	PAGE 8	1	3-1-245
9	FILAMENT	PAGE 6	1	3-1-245
10	FILAMENT BOTTOM HOOK	PAGE 12	1	3-1-245

★ INDICATES A CHANGE

ALL DIMENSIONS IN MM
UNLESS OTHERWISE SHOWN

SCALE— 1:1

DRAWING No 91S-3206

RCA Radiotron Company, Inc.

415 S. Fifth St., HARRISON, N. J.

STANDARDIZING DEPT.

SECTION— Construction Data
SUBJECT— STEM SPECIFICATION
RADIOTRON RCA-245 & CUNNINGHAM CX-345

STANDARDIZING NOTICE No. 3-1-245

SUPERSEDES p. DATED

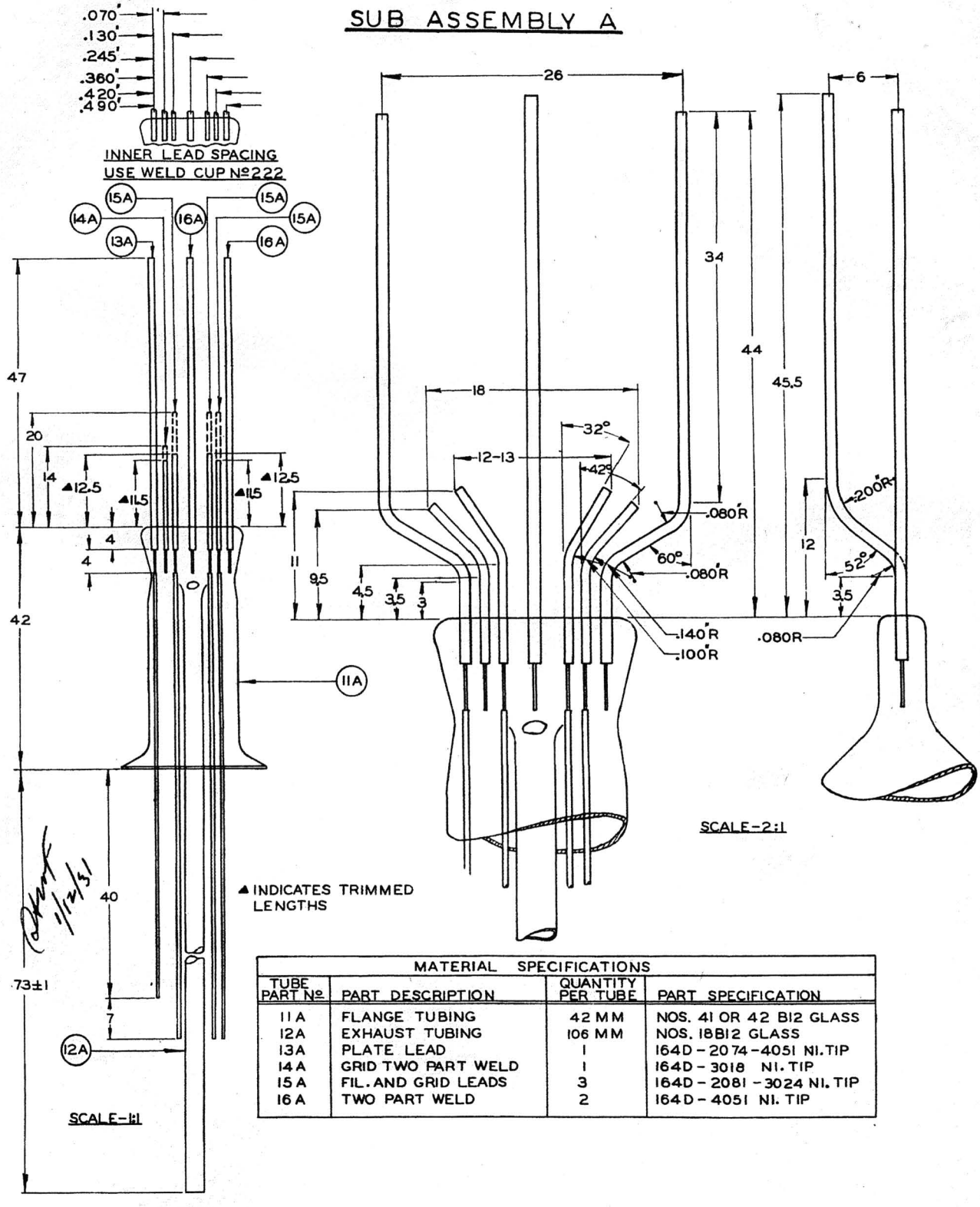

MATERIAL SPECIFICATIONS			
TUBE PART Nº	PART DESCRIPTION	QUANTITY PER TUBE	PART SPECIFICATION
11 A	FLANGE TUBING	42 MM	NOS. 41 OR 42 B12 GLASS
12A	EXHAUST TUBING	106 MM	NOS. 18B12 GLASS
13A	PLATE LEAD	1	164D-2074-4051 NI. TIP
14 A	GRID TWO PART WELD	1	164D-3018 NI. TIP
15 A	FIL. AND GRID LEADS	3	164D-2081-3024 NI. TIP
16 A	TWO PART WELD	2	164D-4051 NI. TIP

★ INDICATES A CHANGE

ALL DIMENSIONS IN MM

RCA Radiotron Company, Inc.

415 S. Fifth St., HARRISON, N. J.

STANDARDIZING DEPT.

SECTION— CONSTRUCTION DATA

STANDARDIZING NOTICE No. 3 - 1 - 245

SUBJECT— FILAMENT SPECIFICATIONS
RADIOTRON RCA-245 & CUNNINGHAM CX-345 SUPERSEDES p. DATED

FILAMENT SPECIFICATIONS

TUBE PART Nº 9

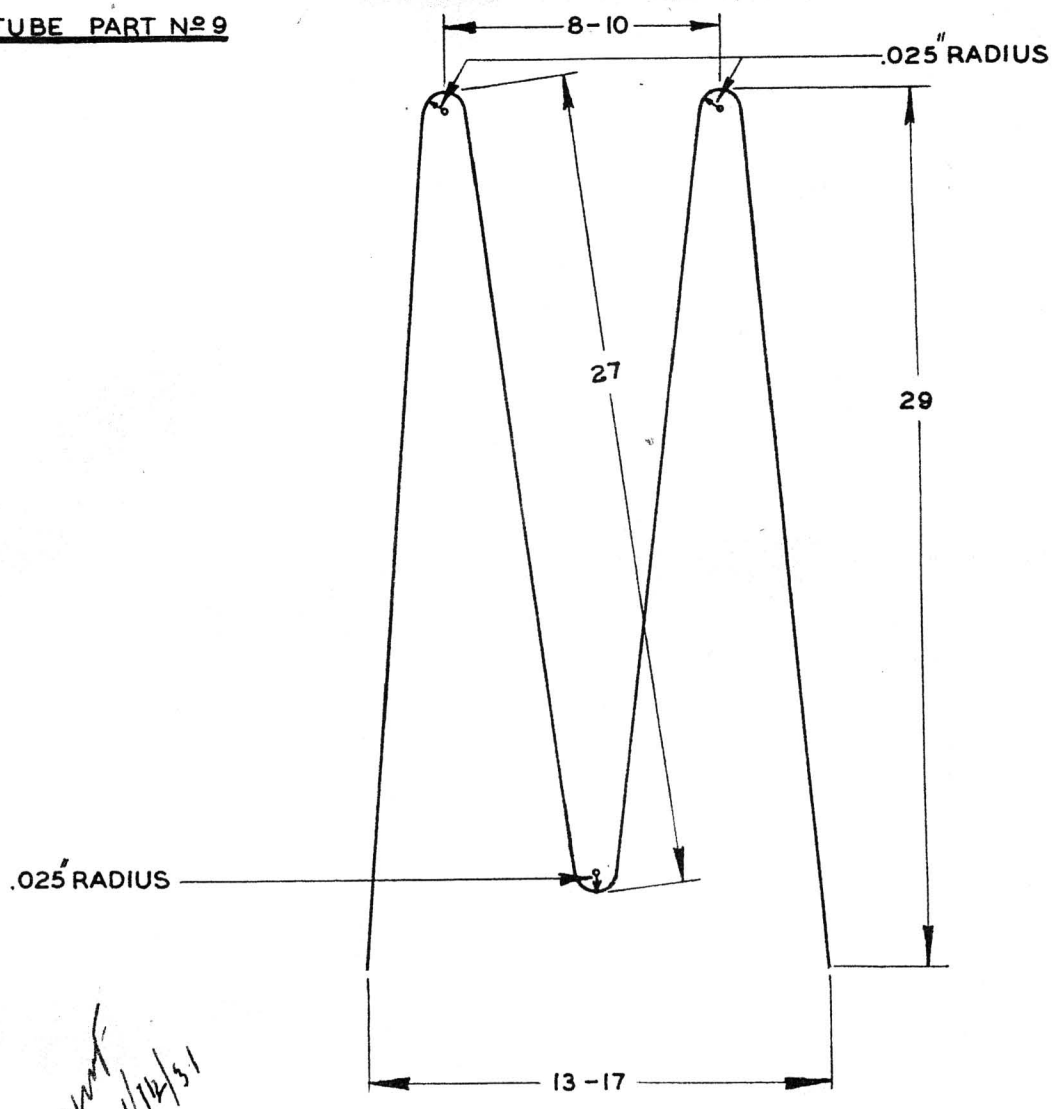

1/14/31

MATERIAL SPECIFICATIONS

1. TYPE A 4 (245) FILAMENT
   (A) MATERIAL SPECIFICATIONS - - - - - - - - - - - - STDZG NOTICE Nº 14C-2-1

MANUFACTURING DATA

1. FORMING SPECIFICATIONS - - - - - - - - - - - - - STDZG. NOTICE Nº 14-4-9
2. TOTAL CUT LENGTH OF FILAMENT - - - - - - - - - 113 MM
3. AMOUNT ALLOWED FOR WELDING - - - - - - - - - - - 2MM (1MM ON EACH END)
4. TOTAL LIGHTED LENGTH OF FILAMENT - - - - - - - 111 MM
5. FILAMENT SPREAD MOUNTED - - - - - - - - - - - - 10.5 - 11.5 MM

★ INDICATES A CHANGE

RCA Radiotron Company, Inc.

415 S. Fifth St., HARRISON, N. J.

STANDARDIZING DEPT.

SECTION— CONSTRUCTION DATA
SUBJECT— GRID SPECIFICATIONS FOR
RADIOTRON RCA-245 & CUNNINGHAM CX-345

STANDARDIZING NOTICE No. 3-1-245

SUPERSEDES p. DATED

SUB ASSEMBLY B

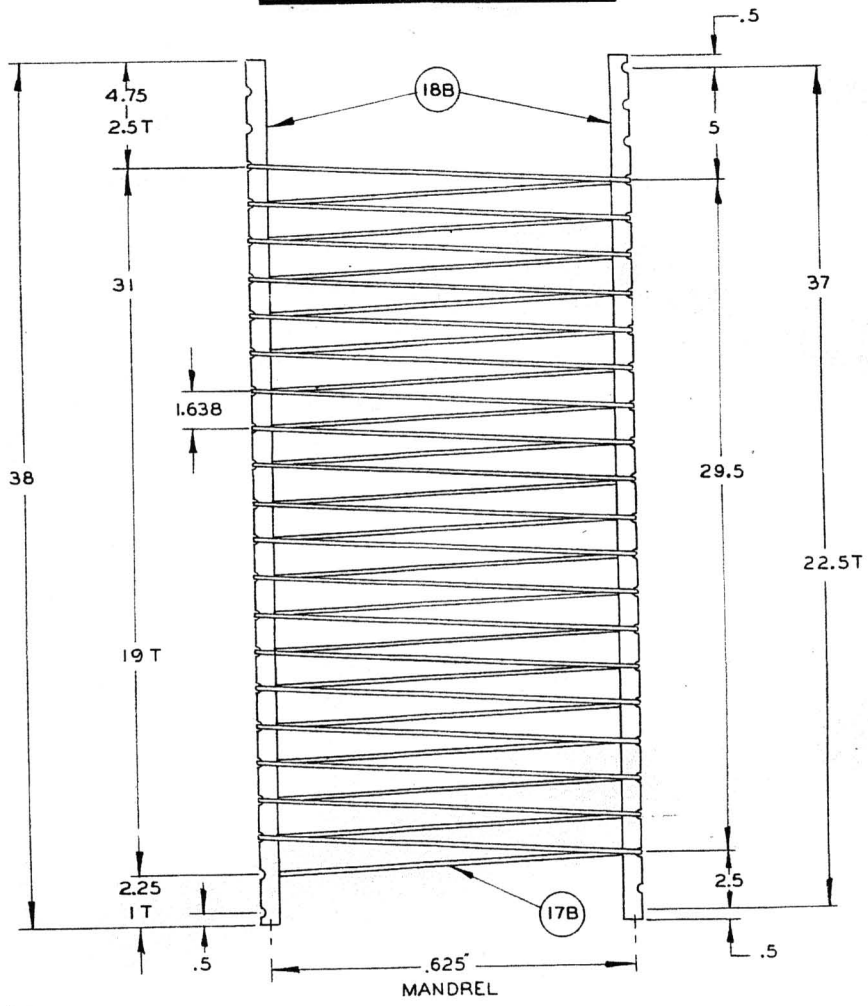

Changed 1/12/31

Changed 10/15/31

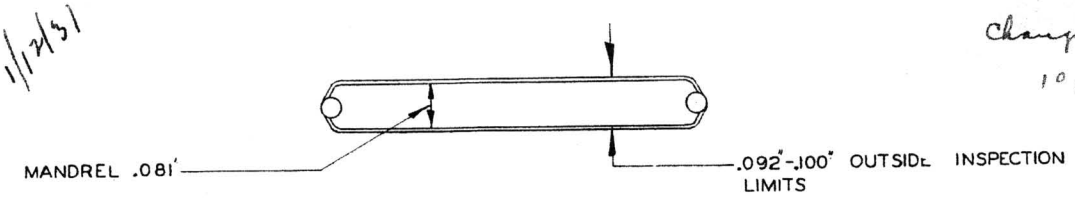

MATERIAL SPECIFICATIONS

17B-GRID WIRE ---------- MOLYBDENUM (26.0-27.5)
1. WT. LIMITS--(MGS/200MM.) ------ ~~27.4 (26.0-28.8)~~ 26.75
2. EQUIVALENT DIAMETER -------- ~~5.2~~ MILS 5.1
3. MAT. PURCHASING SPEC.-------- STDZG. NOTICE No. 33C-M-13

18B-GRID SIDE RODS ---------- TYPE 30-38 Al Ni.
1. MANUFACTURING SPEC.-------- STDZG. NOTICE No. 13-1-1
2. MAT. PURCHASING SPEC.------ STDZG. NOTICE No. 33C-N-5
3. AMOUNT REQUIRED PER TUBE --- 2

TREATMENT

NONE

MANUFACTURING SPECIFICATIONS

1. MANDREL SIZE ---------- .081"X.625"
2. T.P.I. (PITCH OF WINDING) ---------- 15.5
3. DIST. BET. TURNS (CENTER TO CENTER) -------- 1.638 MM.
4. TOTAL TURNS ON WOUND GRID (UNFINISHED) ------ 22.5
5. APPROX. AMOUNT OF WIRE PER TURN ---------- 34.5 MM.
6. APPROX. AMOUNT OF WIRE FOR GRID (UNFIN.) ----- 776 MM.
7. TURNS REMOVED FROM TOP ---------- 2.5
8. TURNS REMOVED FROM BOTTOM ---------- 1
9. TOTAL TURNS ON FINISHED GRID ---------- 19
10. APPROX. AMT. OF WIRE FOR FINISHED GRID ------ 656 MM.
11. APPROX. GRID WIRE LOSS ---------- 15.5%

T = TURNS

★ INDICATES A CHANGE

RCA Radiotron Company, Inc.

415 S. Fifth St., HARRISON, N. J.

STANDARDIZING DEPT.

SECTION— Construction Data
SUBJECT— PLATE SPECIFICATION
RADIOTRON RCA-245 & CUNNINGHAM CX-345

STANDARDIZING NOTICE No. 3-1-245

SUPERSEDES p. DATED

Tube Part No. 8

P-56-A PLATE

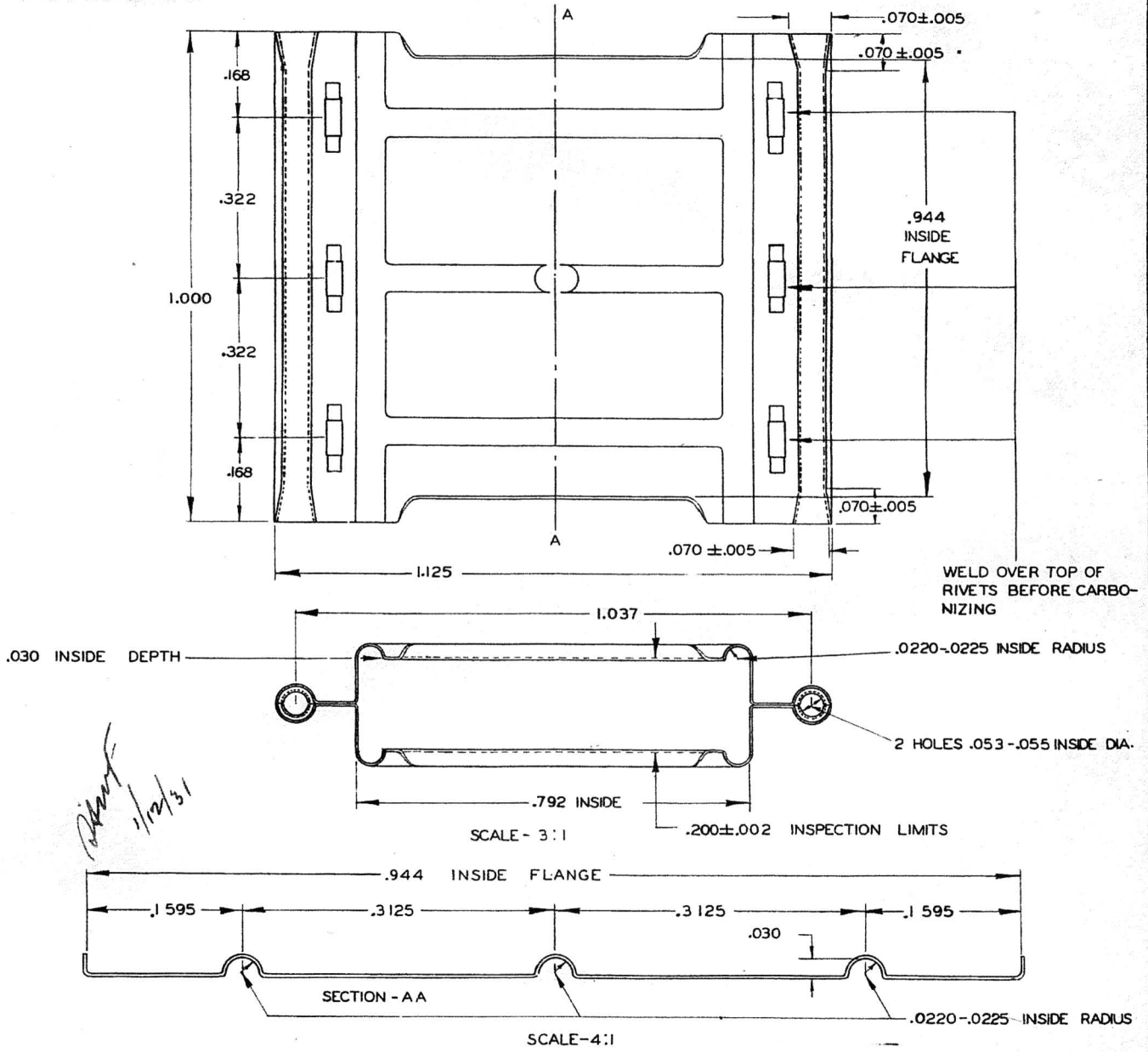

1/12/31

MATERIAL SPECIFICATIONS
1. MATERIAL ---------- .005" NICKEL RIBBON
2. PURCHASING SPECIFICATIONS ---------- STDZG. NOTICE No. 33C — N — 7

PARTS DIVISION TREATMENT
1. CLEANING SCHEDULE ---------- STDZG. NOTICE No. 34 — 4 — 3
2. CARBONIZING SCHEDULE ---------- STDZG. NOTICE No. 22-3-1
   (A) CARBONIZING LIMITS ---------- STDZG. NOTICE No. 22 - 5 - 1
   (B) CLEANING PROCESS ---------- STDZG. NOTICE No. 22 - 4 - 2

PARTS DIVISION INSPECTION LIMITS
1. OUTSIDE THICKNESS ---------- .200"±.002"

TUBE FACTORY TREATMENT
1. SINTERING SCHEDULE ---------- STDZG. NOTICE No. 34 — 1 — 1
   (A) TIME ---------- HEATED 3 MIN. ---------- COOLED 3 MIN.

TUBE FACTORY INSPECTION LIMITS
1. OUTSIDE THICKNESS ---------- .200"±.002"

★ INDICATES A CHANGE

RCA Radiotron Company, Inc.

415 S. Fifth St., HARRISON, N. J.

STANDARDIZING DEPT.

SECTION— Construction Data
SUBJECT— MICA SPACER
RADIOTRON RCA-245 & CUNNINGHAM CX-345.

STANDARDIZING NOTICE No. 3-1-245

SUPERSEDES p. DATED

IM-4 MICA SPACER

Tube Part No.7

INITIALLY USED IN UX-201-A

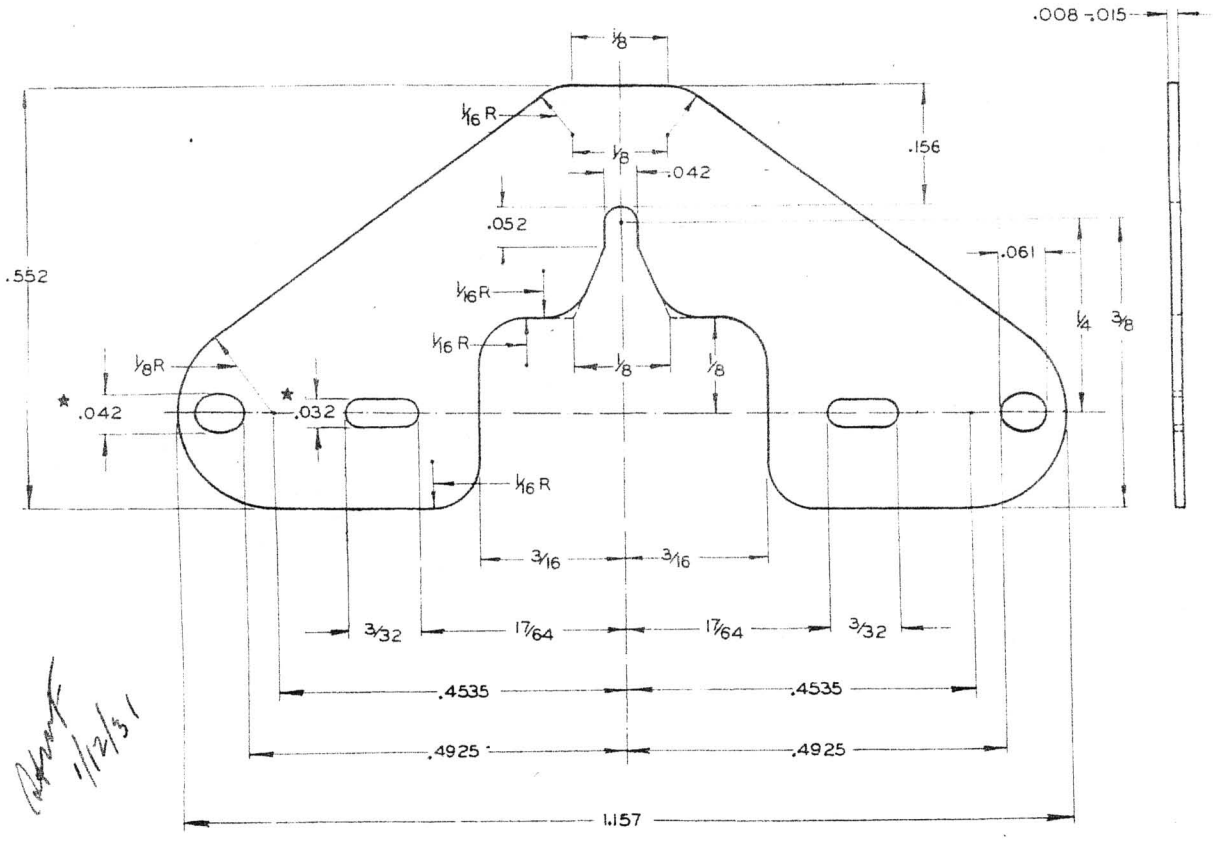

Approved 1/12/31

MATERIAL SPECIFICATIONS

1. Nº 1 WHITE ELECTRICAL MICA - .008"-.015" THICK
   (A). MATERIAL PURCHASING SPECIFICATION - STDZG. NOTICE Nº 33C-M-1

MANUFACTURING DIVISION TREATMENT

1. ALL PARTS SHALL BE FURNISHED FREE FROM OIL OR OTHER EXTRANEOUS MATERIALS.

TUBE FACTORY TREATMENT

1. VACUUM TREATMENT SCHEDULE - STDZG. NOTICE Nº 34-6-1

★ INDICATES A CHANGE

SECTION—Construction Data
SUBJECT—MICA SPACER CLIP.
RADIOTRON RCA-245 & CUNNINGHAM CX-345.

STANDARDIZING NOTICE No. 3-1-245
SUPERSEDES p. DATED

R-2 MICA DISC CLIP

Tube Part No.6

INITIALLY USED IN UX-201-A

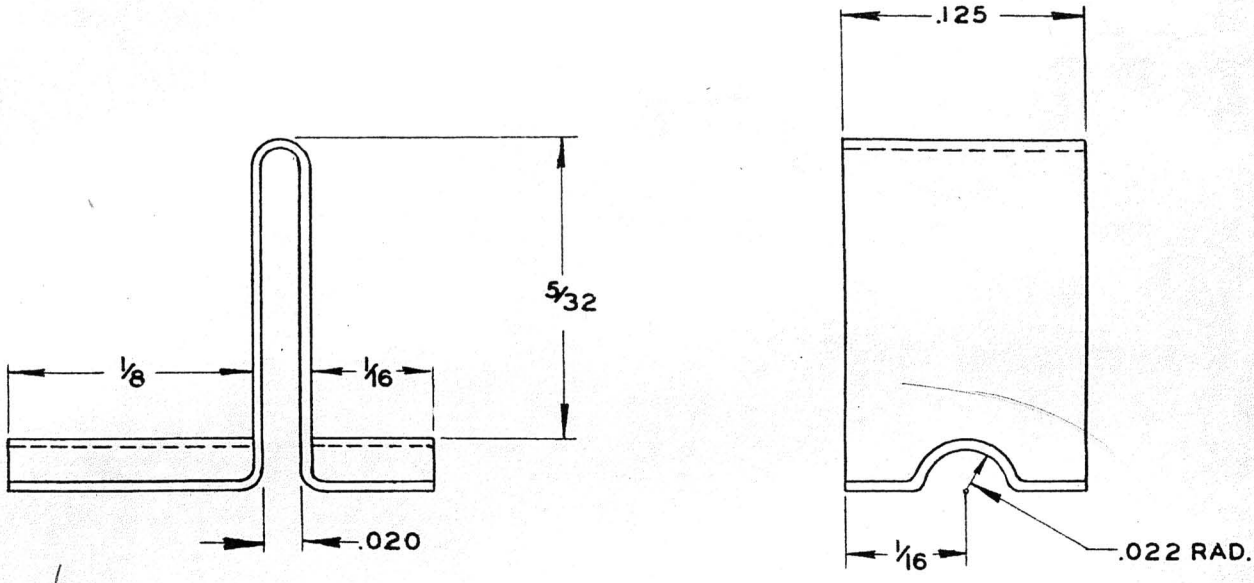

1/12/51

MATERIAL SPECIFICATIONS

1. MATERIAL ---------- .005 NICKEL RIBBON
2. MATERIAL PURCHASING SPEC. ----------STDZG. NOTICE № 33C-N-7

PARTS DIVISION TREATMENT

1. CLEANING SCHEDULE ----------STDZG. NOTICE № 34-4-3
2. ALL PARTS SHALL BE FURNISHED FREE FROM OIL OR OTHER EXTRANEOUS MATERIALS

TUBE FACTORY TREATMENT

1. SINTERING SCHEDULE ----------STDZG. NOTICE № 34-1-1
(A) TIME HEATED 3 MIN. ----------COOLED 3 MIN. TEMP. STANDARD

★ INDICATES A CHANGE
ALL DIMENSIONS IN INCHES

RCA Radiotron Company, Inc.
415 S. Fifth St., HARRISON, N. J.

STANDARDIZING DEPT.

SECTION—
SUBJECT— Construction Data
BEAD ASSEMBLY
RADIOTRON RCA-245 & CUNNINGHAM CX-345.

STANDARDIZING NOTICE No. 3-1-245

SUPERSEDES p. DATED

TYPE No 306-A BEAD

Sub Assembly C

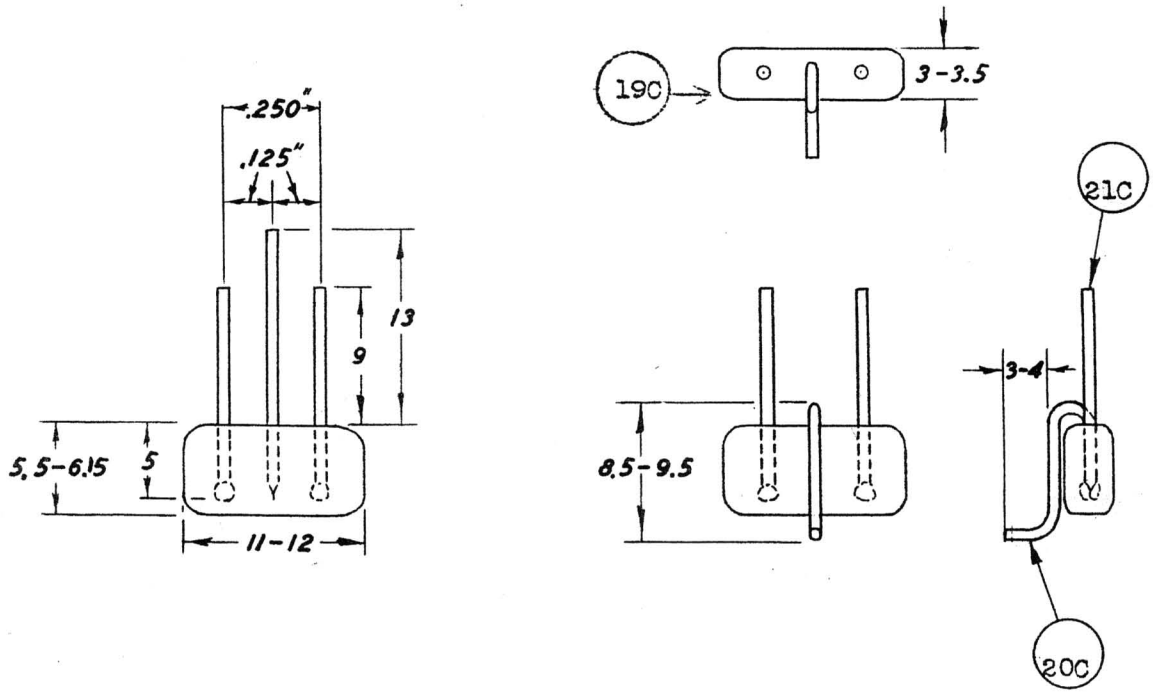

Approved 1/12/31

MATERIAL SPECIFICATIONS				
PART No.	PART DESCRIPTION	PART SPECIFICATION	QUANTITY PER TUBE	MFG. OR MAT. SPEC. STDZG NOTICE No.
19C	BEAD GLASS	No.33 B1 GLASS TUBING	6 MM	10-1-1
20C	BEAD ANCHORS-CENTER	30-18 A4 NICKEL	1	13-1-1
21C	BEAD ANCHORS-OUT SIDE	30-14 A4 NICKEL	2	13-1-1

★ INDICATES A CHANGE

RCA Radiotron Company, Inc.
415 S. Fifth St., HARRISON, N. J.

STANDARDIZING DEPT.

SECTION— Construction Data
SUBJECT— FILAMENT SUPPORTS
RADIOTRON RCA-245 & CUNNINGHAM CX-345

STANDARDIZING NOTICE No. 3-1-245
SUPERSEDES p.
DATED

TYPE 8-12 B8 TUNGSTEN

TUBE PART № 5

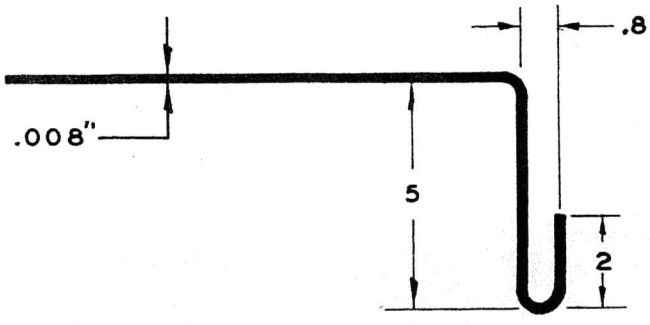

MATERIAL SPECIFICATIONS

1. MATERIAL ---------- 8 MIL. № 218 BLACK TUNGSTEN WIRE

MANUFACTURING SPECIFICATIONS

1. MANUFACTURING PROCESS ---------- STDZG. NOTICE № 13-1-1

TYPE 10-11 D5 MOLYBDENUM

TUBE PART № 10

1/12/31

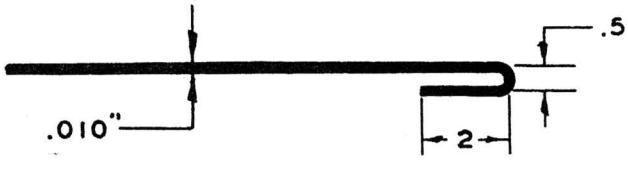

MATERIAL SPECIFICATIONS

1. MATERIAL ---------- 10 MIL. MOLYBDENUM WIRE

MANUFACTURING SPECIFICATIONS

1. MANUFACTURING PROCESS ---------- STDZG. NOTICE № 13-1-1

★ INDICATES A CHANGE

RCA Radiotron Company, Inc.

415 S. Fifth St., HARRISON, N. J.

STANDARDIZING DEPT.

SECTION— CONSTRUCTION DATA
SUBJECT— GETTER ASSEMBLY
RADIOTRON RCA-245 & CUNNINGHAM CX-345

STANDARDIZING NOTICE No. 3 - 1 - 245
SUPERSEDES p. DATED

SUB ASSEMBLY D

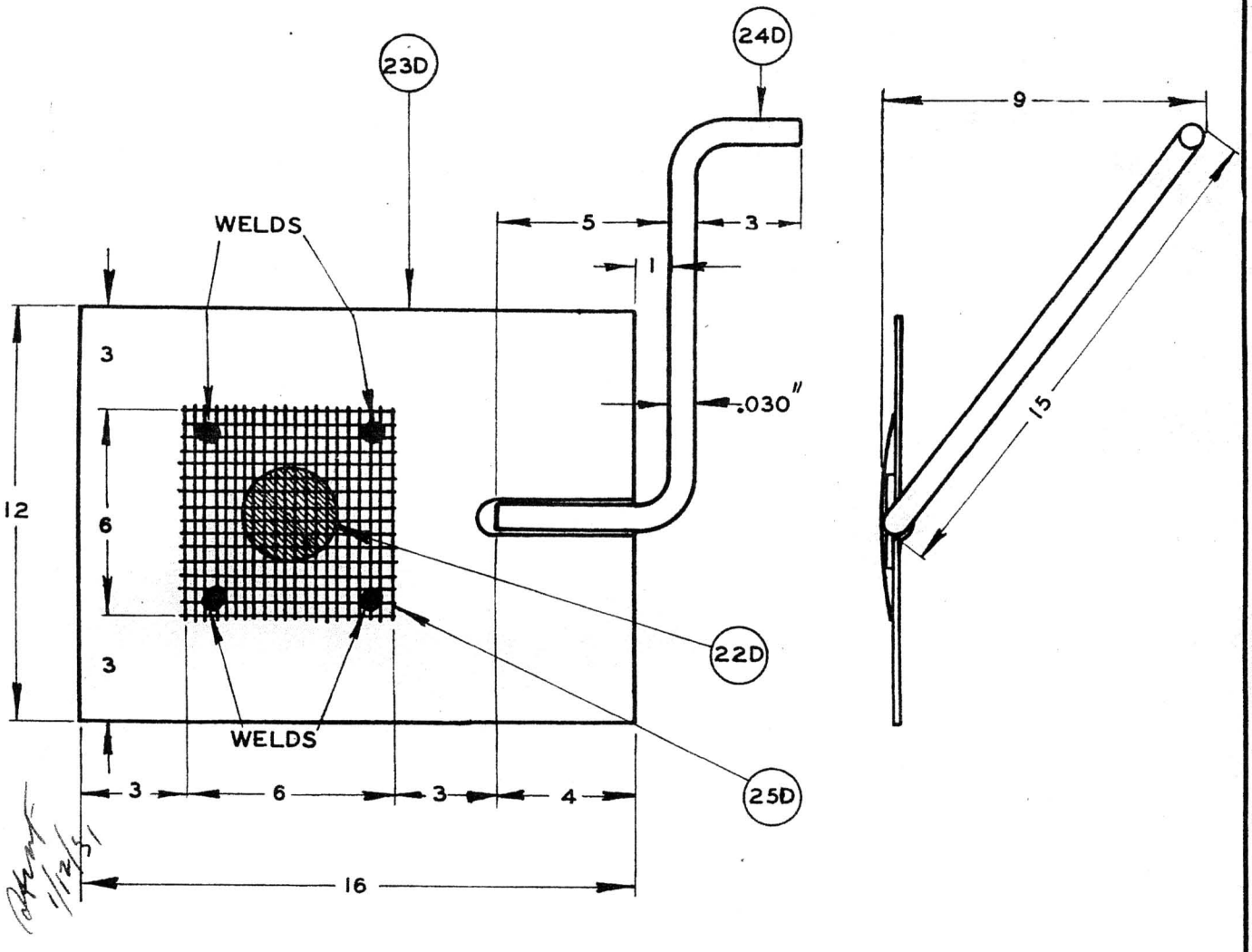

NOTE: TO INSURE PROPER FLASHING, GETTER MUST BE HELD SECURELY AGAINST TAB.

MATERIAL SPECIFICATIONS				
TUBE PART Nº	PART DESCRIPTION	PART SPECIFICATION	QUANTITY PER TUBE	MAT. OR MFG. SPEC. STDZG. NOTICE Nº
22D	GETTER	15C - 22 - 2	1 PIELLET	15 - 1 - 2
23D	GETTER TAB	PAGE 14	1	3 - 1 - 245
24 D	GETTER TAB SUPPORT	PAGE 15	1	3 - 1 - 245
25 D	GETTER STRAP	PAGE 16	1	3 - 1 - 245

★ INDICATES A CHANGE

ALL DIMENSIONS IN MM

RCA Radiotron Company, Inc.

415 S. Fifth St., HARRISON, N. J.

STANDARDIZING DEPT.

SECTION— Construction Data
SUBJECT— GETTER TAB
RADIOTRON RCA-245 & CUNNINGHAM CX-345

STANDARDIZING NOTICE No. 3-1-245

SUPERSEDES p. DATED

R-18 GETTER TAB

Tube Part No. 23D

INITIALLY USED IN UX-280

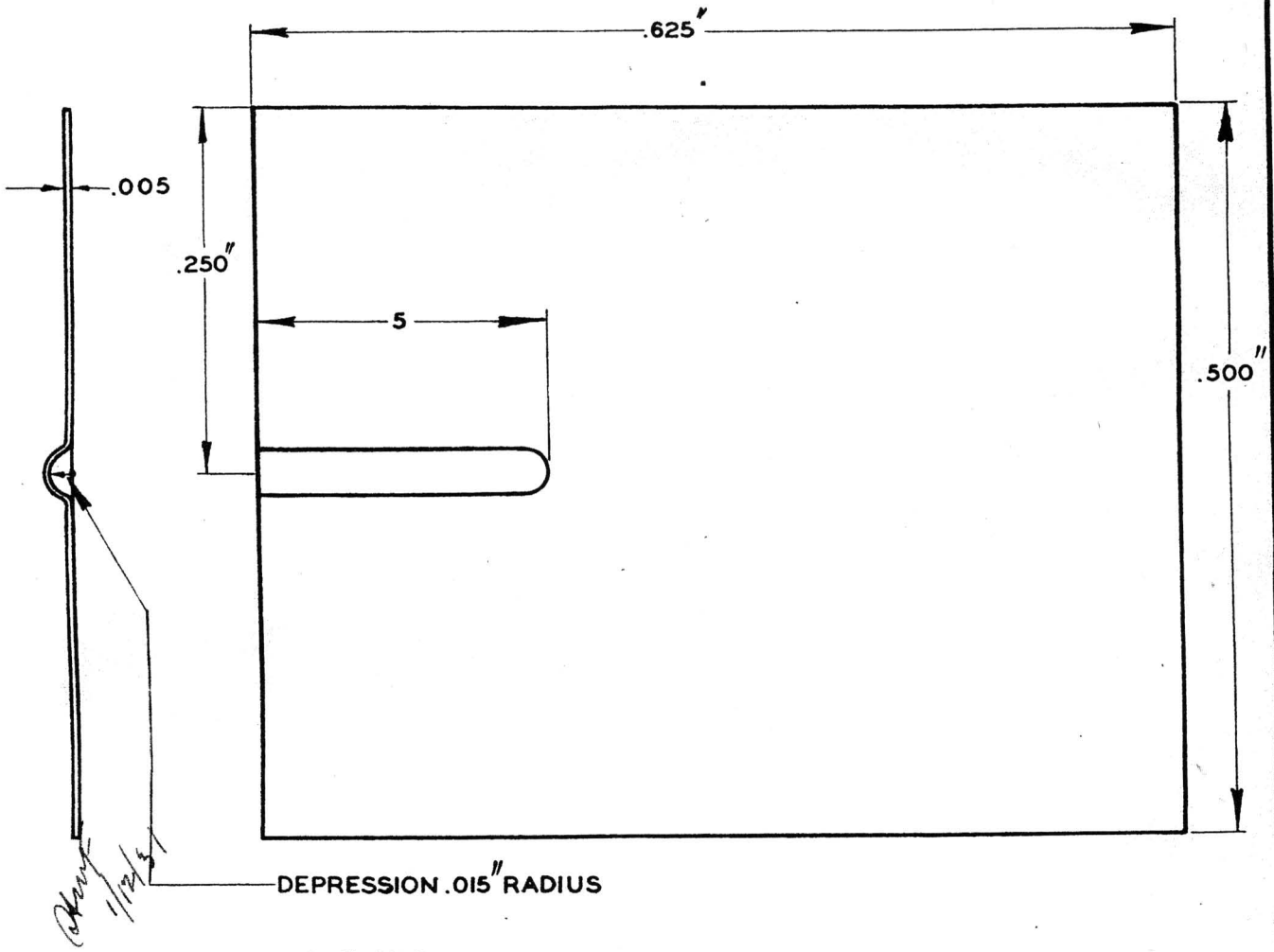

MATERIAL SPECIFICATIONS

1. MATERIAL ----------.005 NICKEL RIBBON
2. MATERIAL PURCHASING SPECIFICATION-----STDZG. NOTICE № 33C-N-7

PARTS DIVISION TREATMENT

1. WASHED IN CARBON TETRACHLORIDE--------STDZG. NOTICE № 34-4-3

TUBE FACTORY TREATMENT

1. FIRED IN HYDROGEN ---------- STDZG. NOTICE № 13-5-1

★ INDICATES A CHANGE
ALL DIMENSIONS IN MM

RCA Radiotron Company Inc.
415 S. Fifth St., HARRISON, N. J.
STANDARDIZING DEPT.

SECTION— Construction Data
SUBJECT— GETTER TAB SUPPORT
RADIOTRON RCA-245 & CUNNINGHAM CX-345

STANDARDIZING NOTICE No. 3-1-245
SUPERSEDES p. DATED

W-18 GETTER TAB SUPPORT

Tube Part No. 24D

INITIALLY USED IN UX-245

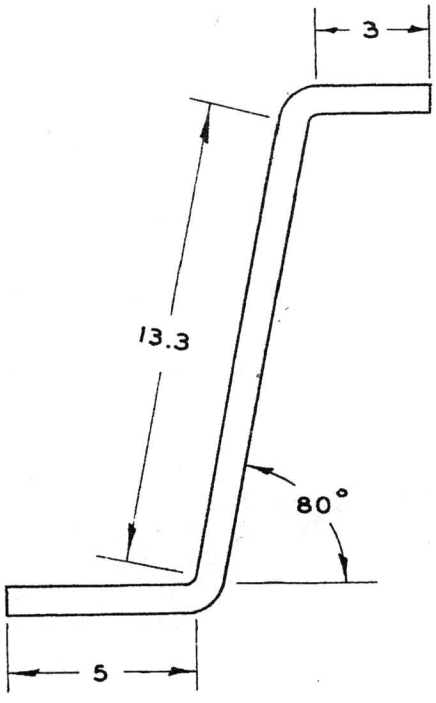

Clark 1/12/31

MATERIAL SPECIFICATIONS

1. MATERIAL ---------- 30 MIL NICKEL WIRE
2. PURCHASING SPECIFICATIONS ---------- STDZG NOTICE No. 33C-N-5

PARTS DIVISION TREATMENT

1. WASHED IN CARBON TETRACHLORIDE ------ STDZG NOTICE No. 34-4-3
2. ALL MATERIAL FURNISHED FREE FROM OIL AND OTHER EXTRANEOUS MATERIAL

TUBE FACTORY TREATMENT

1. FIRED IN HYDROGEN ---------- STDZG. NOTICE No 13-5-1

★ INDICATES A CHANGE
ALL DIMENSIONS IN MM

RCA Radiotron Company, Inc.
415 S. Fifth St., HARRISON, N. J.

STANDARDIZING DEPT.

PAGE No.— 10.
DATE— Jan.10,'31

SECTION— Construction Data
SUBJECT— GETTER STRAP SPEC.
RADIOTRON RCA-245 & CUNNINGHAM CX-345.

STANDARDIZING NOTICE No. 3-1-245
SUPERSEDES p. DATED

W-35 GETTER STRAP

Tube Part No. 25D

INITIALLY USED IN UX-245

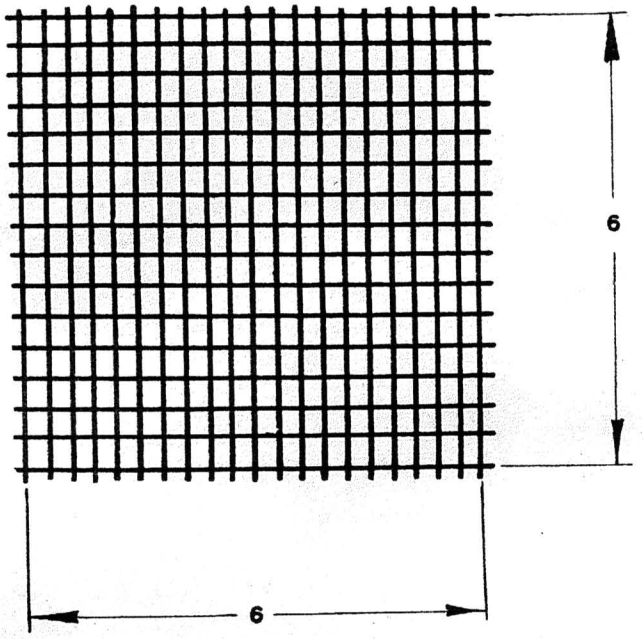

Approved 1/12/31

MATERIAL SPECIFICATIONS

1. MATERIAL - - - - - - - - - - - WIRECLOTH SALVAGED FROM OTHER OPERATIONS

PARTS DIVISION TREATMENT

1. WASHED IN CARBON TETRACHLORIDE - - - - - - - - - STDZG. NOTICE № 34 - 4 - 3

TUBE FACTORY TREATMENT

1. FIRED IN HYDROGEN - - - - - - - - - - - - - - - - - STDZG. NOTICE № 13 - 5 - 1

★ INDICATES A CHANGE

ALL DIMENSIONS IN MM

SEALING AND EXHAUST SPECIFICATIONS

Sealex - 16 head machine - Count Load Position as Number One

1. Schedule - - - - - - - - - - - - - - - 19-1-1 under following conditions:
   (a) Mercury and oil pumps replaced by two McKinney Vacuum Pumps
   (b) Speed - - - - - - - - - - - - - - - 420 tubes per hour
   (c) High Frequency Coils
      (1) Pos. 11 and 13 - - - - - - - 6 turns helical, standard coils
      (2) Pos. 14- - - - - - - - - - - 5 turns spiral, st'd. coils for flashing getter
      (3) Coil Mfg. Spec.- - - - - - - Stdzg.Notice No. 19-6-3
   (d) High Frequency Furnace Output - 124 amperes
   (e) The filament in series with various resistances and a 21.5(21-22) volt A.C.line is lighted in six positions, 9 to 14 inclusive as shown in the accompanying table.

Position	Resistance (ohms)	Position	Resistance (ohms)
9	8.7	12	6.9
10	5.65	13	7.5
11	5.65	14	5.65

Chart. 1/12/31

Recalled 1/4/32

SECTION— Construction Data
SUBJECT— AGING SPECIFICATIONS
RADIOTRON RCA-245 & CUNNINGHAM CX-345.

STANDARDIZING NOTICE No. 3-1-245
SUPERSEDES p. DATED

AGING SPECIFICATIONS

Schedule	E_f Volts AC	#E_b Volts DC	##E_c Volts DC	Time (Min.)
1st Gas	2.50	150	Floating	6
High Filament	4.00	Floating	"	1
2nd Gas	2.50	150	150	7
Emission	2.50	150	Floating	6
Reaging for Gas (104)				
1st	2.25	150	Floating	6
2nd	2.00	150	150	4
3rd	2.50	150	Floating	6

#Line voltage 150V with 1; 75W-115V Mazda lamp connected in series with the plates of each five tubes.

##Line voltage 150V with 1; 25W-110V Mazda lamp in series with the grid of each tube.

1/12/31

SECTION—
SUBJECT— Construction Data
ROUTINE FACTORY TESTS
RADIOTRON RCA-245 & CUNNINGHAM CX-345.

STANDARDIZING NOTICE No. 3-1-245

SUPERSEDES p. DATED

ELECTRICAL RATINGS AND TEST SPECIFICATIONS

Factory Routine Tests

1. Gas Test - Taken on 100% of production
   - (a) Filament volts- - - - - - - - - - - - - - - - - - - E_f 2.5 AC
   - (b) Plate volts - E_p 250 DC
   - (c) Grid volts- E_g -50 DC
   - (d) Read Reverse Grid Current - - - - - - - - - - - - I_g 5 microamps (max.)
   - (e) Test to be made with a 1 megohm grid leak in the grid circuit.

2. Plate Current- - - - - - - - - - - - - - - - - - - Taken on 100% of production
   - (a) Filament volts- - - - - - - - - - - - - - - - - - - E_f 2.5 AC
   - (b) Plate volts - E_p 250 DC
   - (c) Grid volts- E_g -50 DC
   - (d) Read plate current- - - - - - - - - - - - - - - - I_p 31(22-37)m.a.

3. Emission - Taken on 100% of production
   - (a) Filament volts- - - - - - - - - - - - - - - - - - - E_f 2.5 AC
   - (b) Plate volts - E_p 50 DC
   - (c) Grid volts- E_g 50 DC
   - (d) Read emission current - - - - - - - - - - - - - - I_s 100 m.a. (min.)

Test Set Type No.A 204-S - - - - - - - - - - - - - - Stdzg. Notice No.23-1-18

1/12/31

RCA Radiotron Company, Inc.
415 S. Fifth St., HARRISON, N. J.

STANDARDIZING DEPT.

SECTION— Construction Data
STANDARDIZING NOTICE No. 3-1-245
SUBJECT— OCCASIONAL FACTORY TESTS & RADIOTRON TEST LIMITS
RADIOTRON RCA-245 & CUNNINGHAM CX-345
SUPERSEDES p. DATED

ELECTRICAL RATINGS AND TEST SPECIFICATIONS

Occasional Tests	Test Conditions E_f	E_p	E_g
1. Fil. Current - - - - - I_f = 1.50(1.40-1.60)amps. - - - -	2.5	0	0
2. Ampl.Factor - - - - - μ = 3.50(3.25-3.75) - - - - - -	2.5	250	-50
3. Plate Resistance - - - r_p = 1750(1500-2200)ohms - - - -	2.5	250	-50
4. Mutual Conductance - - g_m = 2000(1650-2400)micromhos - -	2.5	250	-50
5. Leakage (Grid) - - - - I_g = 1.0 microamp(max.) - - - - -	0	250	-50
6. A.C. Amplification -	2.5	250	-50

(a) Load Impedance = 2000 ohms.
(b) Power Factor = .707
(c) Signal Voltage = 35 Volts RMS.
(d) Rejection Voltage = 58 Volts RMS.

RADIOTRON ELECTRICAL TEST LIMITS

	I_f	I_g gas	I_g leakage	I_p	μ	r_p	g_m	I_s
Upper Limit	1.60	5.0	1.0	37	3.75	2200	2400	- -
Upper Zone Limit	1.55	3.5	.5	34	3.65	1950	2250	- -
Bogie	1.50	- -	- -	31	3.5	1750	2000	- -
Lower Zone Limit	1.45	- -	- -	27	3.35	1600	1775	125
Lower Limit	1.40	- -	- -	22	3.25	1500	1650	100

Sent 1/12/31

RCA Radiotron Company, Inc.
415 S. Fifth St., HARRISON, N. J.

STANDARDIZING DEPT.

SECTION—Construction Data
SUBJECT—TUBE MARKING, BASE THREADING, PACKING
RADIOTRON RCA-245 & CUNNINGHAM CX-345.

STANDARDIZING NOTICE No. 3-1-245
SUPERSEDES p. DATED

TUBE MARKING SPECIFICATIONS

1. BULB MARKING

(a) Monogram Design Specifications - - - - Stdzg. Notice No. 27-1-3

(1) UX-245 - - - - - - - - - - - - - - - - 7/16" Reverse RCA Monogram

(2) CX-345 - - - - - - - - - - - - - - - - 7/16" Reverse C Monogram

(b) Application

(1) The monogram shall be applied to the inside top center of the bulb as specified in Standardizing Notice No. 27-1-3.

2. BASE MARKING

(a) Marking Design Specifications

(1) UX-245- - - - - - - - - - - - - - - - Design RCA-2 Stdzg. Not. No. 27-1-1A

(2) CX-345- - - - - - - - - - - - - - - - Design C -2 Stdzg. Not. No. 27-1-1B

(b) Application

(1) Marking applied as specified in Stdzg. Notices Nos. 27-1-1, 27-1-1A and 27-1-1B.

BASE THREADING

1. Base Threading Specifications - - - - - - - - Stdzg. Notice 24-1-2

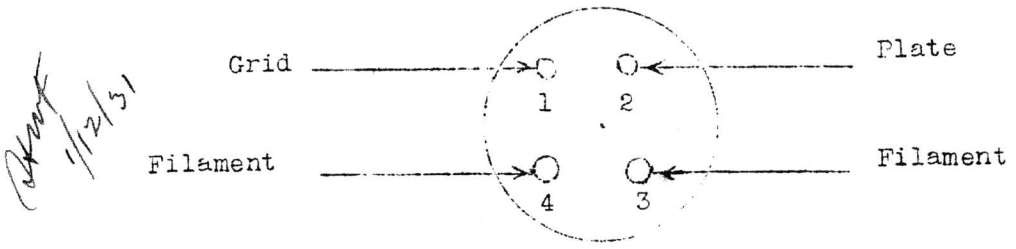

VIEW OF OPEN END OF BASE

PACKING SPECIFICATIONS

1. UX-245 - Page 10 Stdzg. Not. No. 29-0-2
2. CX-345 - Page 10 Stdzg. Not. No. 29-0-2

RCA Radiotron Company, Inc.
415 S. Fifth St., HARRISON, N. J.

STANDARDIZING DEPT.

SECTION— Construction Data
STANDARDIZING NOTICE No. 3-1-245
SUBJECT— CONSOLIDATED LIST OF TUBE PARTS & MATERIALS
RADIOTRON RCA-245 & CUNNINGHAM CX-345 SUPERSEDES p. DATED

CONSOLIDATED LIST OF TUBE PARTS AND MATERIALS

Tube Part No.	Part Description	Part Specification	Qty per Tube
	General		
1	Bulb	Type S17S1 (No.8 Lime Glass)	1
2	Base	Type 3306-A	1
3	Contact Pin Solder	Pure Tin	-
4	Basing Cement	No. 5	-
5	Top Filament Hook	Type 8-12 B8 Tungsten	2
6	Mica Spacer Clip	Type R-2	1
7	Mica Spacer	Type IM-4	1
8	Plate	Type P-56-A	1
9	Filament	Type A4 (245)	113mm.
10	Filament Bottom Hook	Type 10-11 D5 Molybdenum	1
	Stem		
11A	Flange Tubing	No. 41 or 42 B12 Glass	42mm.
12A	Exhaust Tubing	No. 18 or B12 Glass	106mm.
13A	Welds-Plate Lead	164D-2074-4051 Ni.tip	1
14A	Grid Two Part	164D-3018 Ni. tip	1
15A	Fil. & Grid Leads	164D-2081-3024 Ni. tip	3
16A	Plate & Center Two Part	164D-4051 Ni. tip	2
	Grid Assembly		
17B	Grid Wire	Mo.Wt.limits 26.0-28.8 mgs/200mm.	776mm.
18B	Grid Side Rods	30-38 Al Ni.	2
	Bead Assembly		
19C	Bead Glass	No.33B1 Glass Tubing	6mm.
20C	Bead Anchors	30-18A4 Nickel	1
21C	Bead Anchor	30-14A4 Nickel	2
	Getter Assembly		
22D	Getter	15C-22-2 Pellets	1
23D	Getter Tab	Type R-18	1
24D	Getter Tab Support	Type W-18	1
25D	Getter Strap	Metal Cloth	6 x 6mm.

Approved 1/12/31

Recommended for Stdzn 11-28-30 & pending to Eng.

Packing Spec. - Page 10 Stdzg. Notice No. 29-0-2

R(Radiotron Company, I
415 S. Fifth St., HARRISON, N. J.

PAGE NO.— 1
DATE— Nov. 11, '32

STANDARDIZING SECTION
RESEARCH AND DEVELOPMENT LAB.

Received APR 3 1934

SECTION— Construction Data
SUBJECT— INDEX TO SPECIFICATIONS
TUBE TYPE 50

STANDARDIZING NOTICE No. 3-1-50
1(3-1-250)
SUPERSEDES p. DATED May 25, '29

Incorporated in the succeeding pages of this Standardizing Notice are complete specifications for the manufacture of tube type 50.

The specifications herein contained supersede and replace all specifications issued under Standardizing Notice No. 3-1-250.

11/1/32

*INDICATES A CHANGE
**INDICATES AN ADDITION

TUBE TYPE 50

PUBLISHED CHARACTERISTICS

OPERATING CONDITIONS						RATINGS						
$E_{f\,A.C.}$	E_b	E_{C1}	E_{C2}	R_p	NOTE	I_b	μ	S_m	r_p	I_{C2}	I_f	P. O.
7.5	300	-54		4600		35	3.8	1900	2000		1.25	1600
7.5	350	-63		4100		45	3.8	2000	1900			2400
7.5	400	-70		3670		55	3.8	2100	1800			3400
7.5	450 MAX.	-84		4350		55	3.8	2100	1800			4600

PREHEATING CONDITIONS

	$E_{f\,D.C.}$	E_b	E_{C1}	E_{C2}	E_h	NOTE
A	7.5	450	-80			♦1
B						
C						

LIFE TEST OPERATING CONDITIONS

$E_{f\,A.C.}$	E_b	E_{C1}	E_{C2}	E_h	NOTE
7.5	450	-84			

LIFE TEST CLASSIFICATIONS

CLASS	
A	READ AT ALL PERIODS
B	READ AT INITIAL & FINAL PERIODS ONLY
C	READ INITIALLY ONLY
D	READ ONLY ON REQUEST

TYPE— —POWER AMPLIFIER
BULB— —S21
BASE— —3302-A
CATHODE-COATED FIL.

SHEET Nº 925-5206
DATE: NOV. 16, 1932
SUPERSEDES Nº 925- ——
DATED: SEPT. 1, 1930

OVERALL LENGTH

MANUFACTURING $5\frac{23}{32}'' - 6\frac{1}{32}''$
PUBLISHED---- $6\frac{1}{4}''$ MAX.

CAPACITANCES

$C_{(GRID-PLATE)}$— 9 $\mu\mu f$
$C_{(INPUT)}$---- 5 $\mu\mu f$
$C_{(OUTPUT)}$---- 3 $\mu\mu f$

CHARACTERISTICS AND QUALITY RATINGS

TEST CONDITIONS								PREHEATING CONDITION	LIFE TEST CLASS				INSPECTION			NOTE
E_f D.C. VOLTS	E_b D.C. VOLTS	E_{C1} D.C. VOLTS	E_{C2} D.C. VOLTS	E_h D.C. VOLTS	SIGNAL V. 60~ R.M.S.	R_p OHMS P.F.=1			A	B	C	D	RECORD	BELT	100% FACT.	
7.5	450	-80						A		✓			✓	✓	✓	♦2
0	450	-80								✓			✓	✓	✓	*2,3
7.5											✓		✓			
7.5	450	-80							✓				✓	✓	✓	
7.5	450	-80								✓			✓			
7.5	450	-80								✓			✓			
7.5	450	-80								✓			✓			
7.5	250	0							✓				✓	✓	✓	5
												✓	✓			4

TESTS	READ	UNIT	LIFE TEST END POINT			LIMITS						
TESTS TO BE MADE IN FOLLOWING SEQUENCE			504 HOURS MIN. AV.	504 HOURS	1008 HOURS	CUSTOMER MIN.	FACTORY MIN.	ZONE MIN.	BOGIE	ZONE MAX.	FACTORY MAX.	CUSTOMER MAX.
GAS	I_{GAS}	μ A.								8	15	20
GRID LEAKAGE	I_L	μ A.								5	10	15
FIL. CURRENT	I_f	AMP.				1.10	1.15	1.20	1.25	1.30	1.35	1.40
PLATE CURRENT	I_b	MA.				40	42	48	55	62	68	70
AMPLI. FACTOR	μ					3.4	3.45	3.6	3.75	3.9	4.05	4.1
PLATE RESIST.	r_p	OHM				1450	1500	1650	1800	1950	2100	2150
TRANS CONDUCT.	S_m	μMHO				1650	1700	1900	2100	2300	2500	2550
EMISSION	I_s	MA.	104	102	100	104	107	120				
CAPACITY	CAP.	$\mu\mu f$										

NOTES: ① ONE QUARTER MEGOHM RESISTOR IN GRID CIRCUIT OF EACH TUBE. PREHEAT FOR 2 MIN. IMMEDIATELY PRIOR TO GAS TEST. ♦② ONE QUARTER MEGOHM RESISTOR IN GRID CIRCUIT OF EACH TUBE. IN RECORDED READING SECTION, IF GAS EXCEEDS FACTORY LIMIT A SECOND TEST SHALL BE MADE WITH THE RESISTOR SHORTED, WHICH SHALL BE TEST FOR CUSTOMER LIMIT. ③ TUBE TO BE HOT. ④ READ 3 CAPACITIES ON 5 TUBES EACH WEEK. ⑤ ALL PRODUCTION TESTS ON THE BASIS OF 1008 HR. END POINT.

♦ INDICATES A CHANGE

RFS 666-3109 B

RCA Radiotron Company, Inc.
415 S. Fifth St., HARRISON, N
STANDARDIZING DEPT.
STANDARDIZING NOTICE No. 3-1-50
SUPERSEDES p. DATED
PAGE No.— 2
DATE— NOV. 18, 1932

SECTION—Construction Data
SUBJECT—COMPLETE TUBE ASSEMBLY
TUBE TYPE 50

STANDARDIZING NOTICE No. 3-1-50
11(3-1-250) Feb 29, '32
SUPERSEDES 13(3-1-250) DATED Oct. 10, '29

COMPLETE TUBE ASSEMBLY

DIMENSION A		BOGIE	MIN.	MAX.
MFG.	INCHES	$5\frac{29}{32}$	$5\frac{23}{32}$	$6\frac{1}{32}$
	MM	150	145.5	153
PUB.	INCHES			$6\frac{1}{4}$
	MM			159

DIMENSION B		BOGIE	MIN.	MAX.
MFG.	INCHES	$5\frac{9}{32}$	$5\frac{3}{32}$	$5\frac{13}{32}$
	MM	134	129.4	137.3
PUB.	INCHES			$5\frac{5}{8}$
	MM			143.0

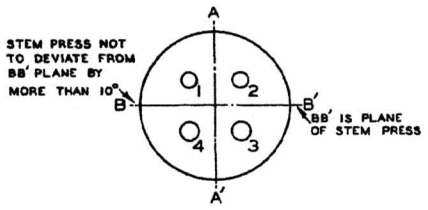

BASE THREADING SPECIFICATIONS

PIN No.	ELEMENTS	PIN No.	ELEMENTS
1	Grid	3	Filament
2	Plate	4	Filament

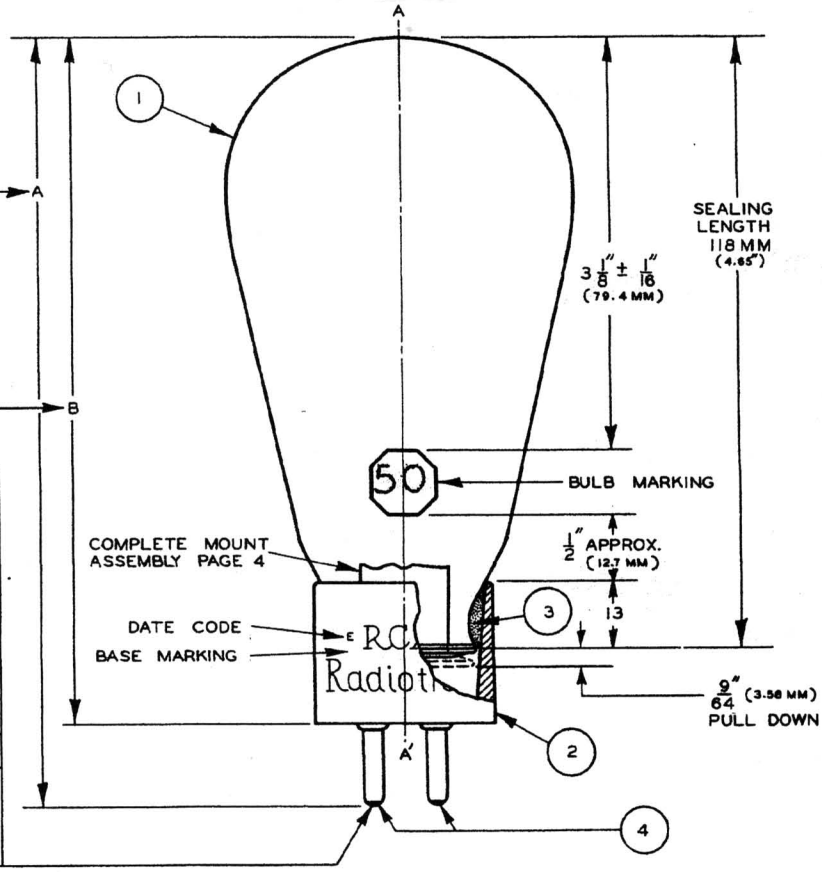

BULB MARKING
1. MARKING DESIGN AND APPLICATION SPECIFICATIONS ---------- STDZG. NOTICE No. 27-1-5
2. FACTORY CODE IDENTIFICATION ---------- STDZG. NOTICE No. 27-1-9

BASE MARKING
1. MARKING DESIGN AND APPLICATION SPECIFICATIONS ---------- STDZG. NOTICE No. 27-1-1
2. DATE CODE MARKING ---------- STDZG. NOTICE No. 27C-3-2

PACKING
(A) FACTORY AND SERVICE WAREHOUSE PACKING SPECIFICATIONS --- PAGE 3, STDZG. NOTICE No. 29-0-2

MATERIAL SPECIFICATIONS

TUBE PART No.	PART DESCRIPTION	PART SPECIFICATION	QUANTITY PER TUBE	MATERIAL OR MFG. SPEC. STDZG. NOTICE NUMBER
1	BULB	S21S1	1	17-7-2
2	BASE	TYPE 3302-A	1	24-1-1
3	BASING CEMENT	No. 6	.0085 LBS.	24-2-6
4	CONTACT PIN SOLDER	PURE TIN	.0005 LBS.	33C-S-3

*Sheet reissued to conform to new notice

★ INDICATES A CHANGE
ALL DIMENSIONS IN MM UNLESS OTHERWISE SHOWN

SCALE— $\frac{3}{4}$:1

DRAWING No. 92S-31079
12-109

SECTION— Construction Data
SUBJECT— COMPLETE MOUNT ASSEMBLY
TUBE TYPE 50

STANDARDIZING NOTICE No. 3-1-50
9a(3-1-250) May 25, '29
SUPERSEDES P. 9(3-1-250) DATED May 25, '29

COMPLETE MOUNT ASSEMBLY

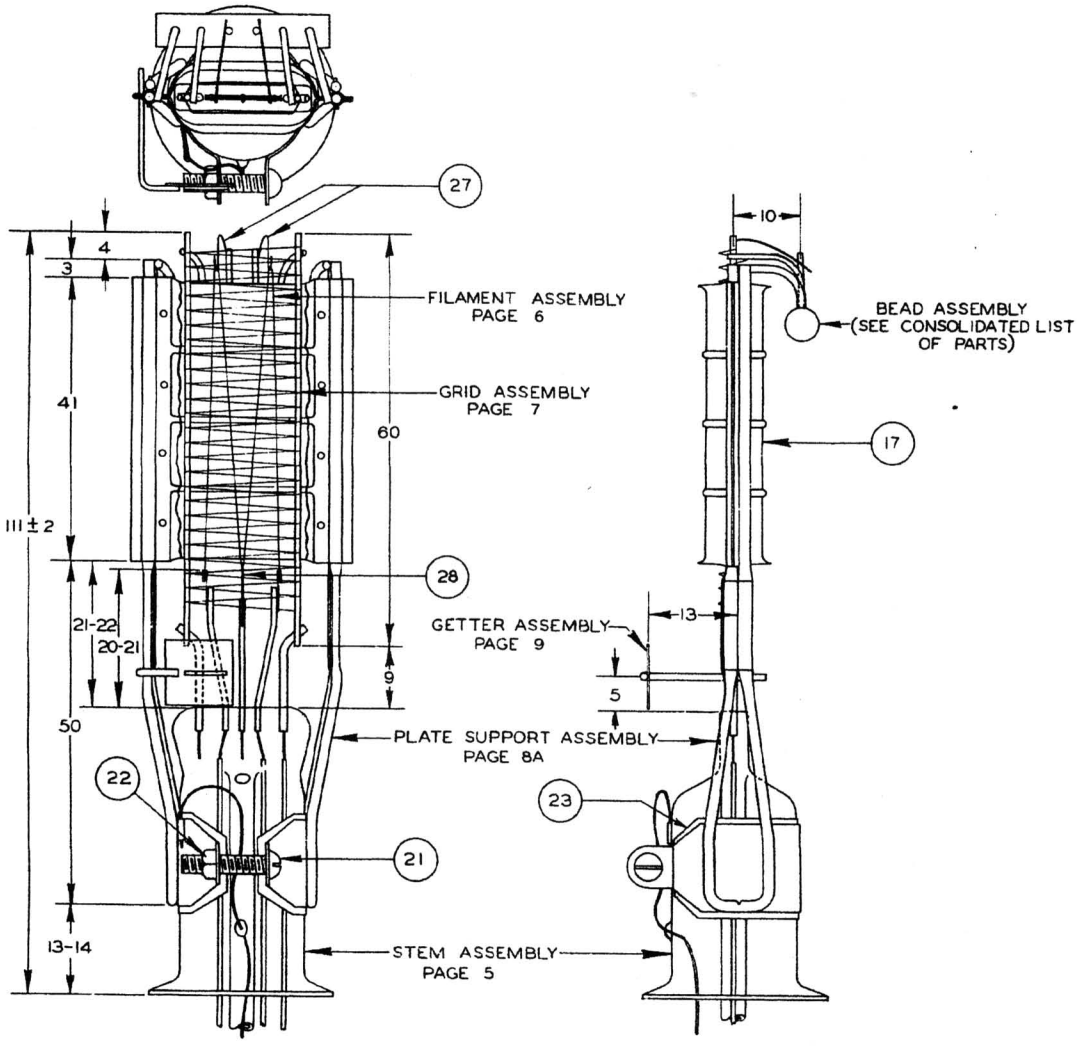

MATERIAL SPECIFICATIONS			
TUBE PART №	PART DESCRIPTION	PART SPECIFICATION	QUANTITY PER TUBE
17	PLATE	PAGE 8	1
21	COLLAR BOLT	SEE CONSOLIDATED LIST OF PARTS	1
22	NUT FOR COLLAR BOLT	" " " " "	1
23	MICA COLLAR SPACER	" " " " "	1
27	TOP FILAMENT TENSION HOOKS	" " " " "	2
28	FILAMENT BOTTOM HOOK	" " " " "	1

*Top Grid anchors eliminated and new lead used

★ INDICATES A CHANGE
ALL DIMENSIONS IN MM
UNLESS OTHERWISE SHOWN

SCALE— 1 : 1

DRAWING No. 92S-31080
10-109

SECTION— Construction Data
SUBJECT— STEM ASSEMBLY
TUBE TYPE 50

STANDARDIZING NOTICE No. 3-1-50
4(3-1-250) 3-2-15
SUPERSEDES p.
DATED May 20, '29

FS-55 STEM ASSEMBLY

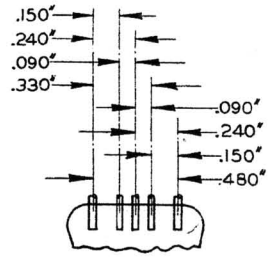

INNER LEAD SPACING

INITIALLY USED IN TUBE TYPE 50

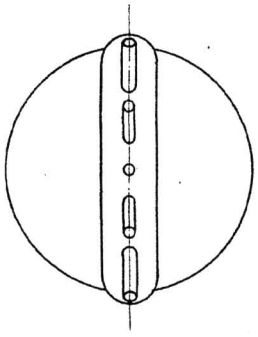

FOR UNTRIMMED STEM SPECIFY FSU-55

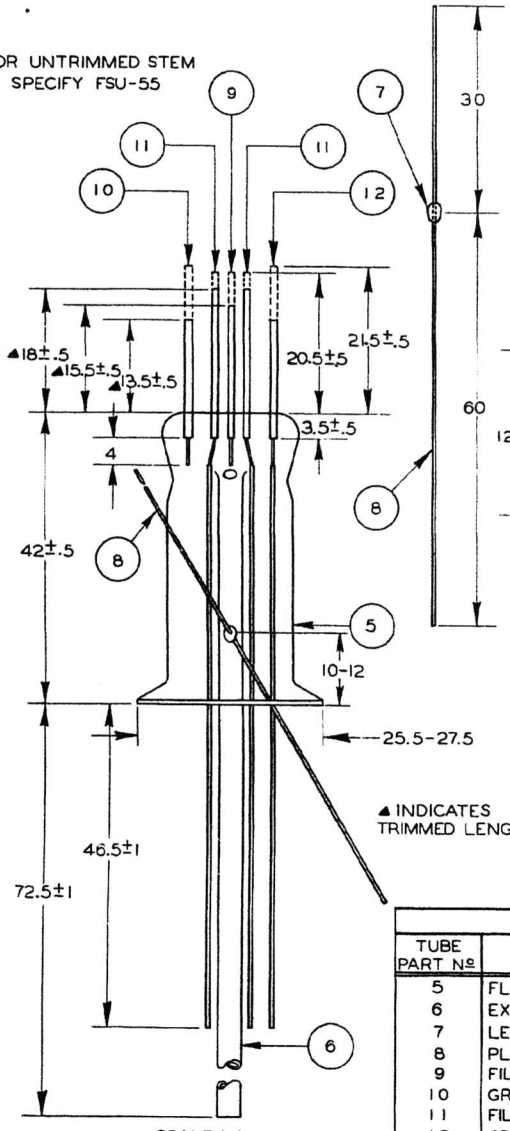

SCALE 1:1

▲ INDICATES TRIMMED LENGTH

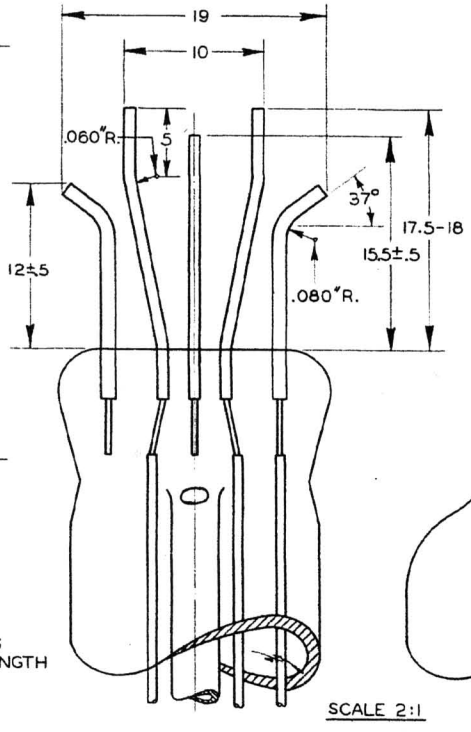

SCALE 2:1

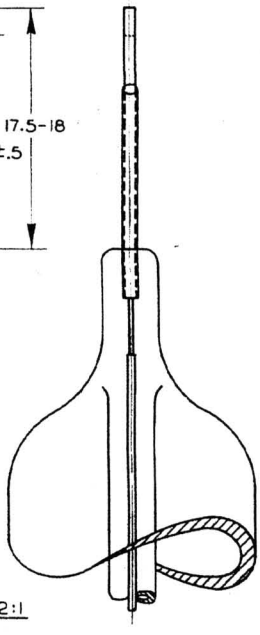

MATERIAL SPECIFICATIONS			
TUBE PART №	PART DESCRIPTION	QUANTITY PER TUBE	PART SPECIFICATION
5	FLANGE TUBING	46 MM	GAUGE №A42 №12 GLASS
6	EXHAUST TUBING	106 MM	GAUGE №18 №12 GLASS
7	LEAD WRAPING TUBING	12 MM	GAUGE №9-№10 №12 GLASS
8	PLATE LEAD	1	1690D
9	FILAMENT SPUD	1	164D-3024 NI. TIP
10	GRID SPUD	1	164D-4025 NI. TIP
11	FILAMENT LEADS	2	164D-2081-3024 NI. TIP
12	GRID LEAD	1	164D-2081-4025 NI. TIP

*Sheet revised to conform to new notice

★ INDICATES A CHANGE

ALL DIMENSIONS IN MM UNLESS OTHERWISE SHOWN

SCALE—AS SHOWN

DRAWING No. 92S-31069
10-109

11/14/32

92-P. F. 23

RCA Radiotron Company, Inc.
415 S. Fifth St., HARRISON, N. J.

STANDARDIZING SECTION
RESEARCH AND DEVELOPMENT LAB.

P/ NO.— 6
DATE— Nov. 11, '32
Recalled May 23 '32

SECTION— Construction Data
SUBJECT— FILAMENT SPECIFICATIONS
TUBE TYPE 50

STANDARDIZING NOTICE No. 3-1-50
SUPERSEDES p. 5(3-1-250) 3-2-15 DATED May 20, '29

FF-7 FILAMENT ASSEMBLY

Initially used in 50

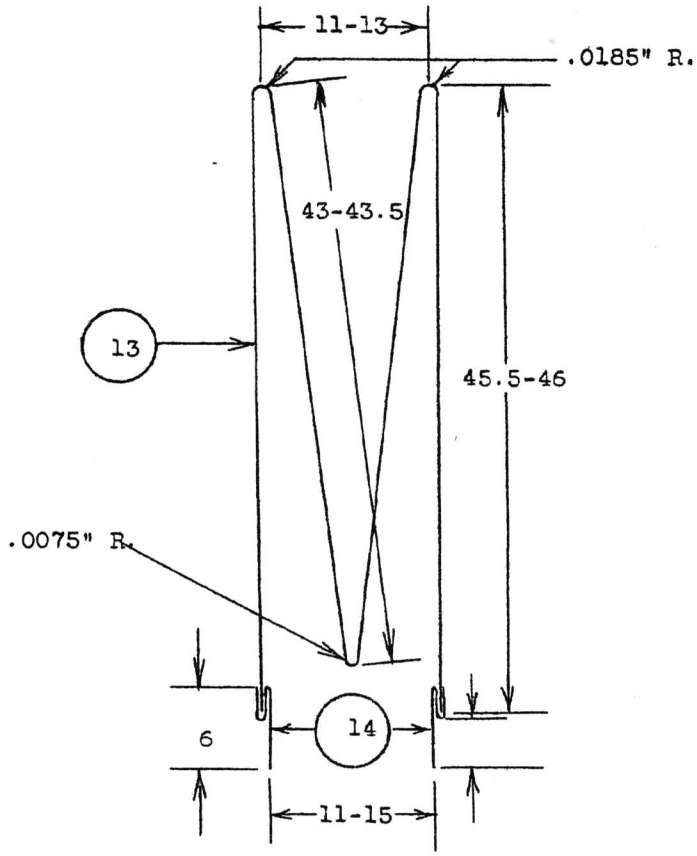

Manufacturing Data

1. Forming Specifications - - - - - - - - - - - - - - Stdzg. Not. No. 14-4-4
2. Total Cut Length of Filament - - - - - - - - - - - 180 mm
3. Amount Allowed for Welding - - - - - - - - - - - - 4 mm(2mm on each side)
4. Total Lighted Length of Filament - - - - - - - - - 176 mm
5. Filament Spread Mounted - - - - - - - - - - - - - 10 mm

Chart 11/14/32

MATERIAL SPECIFICATIONS				
Tube Part No.	Part Specification	Part Designation	Quantity per Tube	Mat. or Mfg. Spec. Stdzg. Not. No.
13	Filament	QE13(50)	1	14C-2-2
14	Filament Term.	R-14	2	13-1-1A

☆ INDICATES A CHANGE

*FF designation assigned

ALL DIMENSIONS IN mm
UNLESS OTHERWISE SHOWN

SCALE— 2:1

DRAWING No. 92S-31142

SECTION— Construction Data
SUBJECT— GRID SPECIFICATIONS
TUBE TYPE 50

STANDARDIZING NOTICE No. 3-1-50
6(3-1-250) 3-2-15
SUPERSEDES p. DATED June 30, '29

FG-242 GRID ASSEMBLY

INITIALLY USED IN TUBE TYPE 250

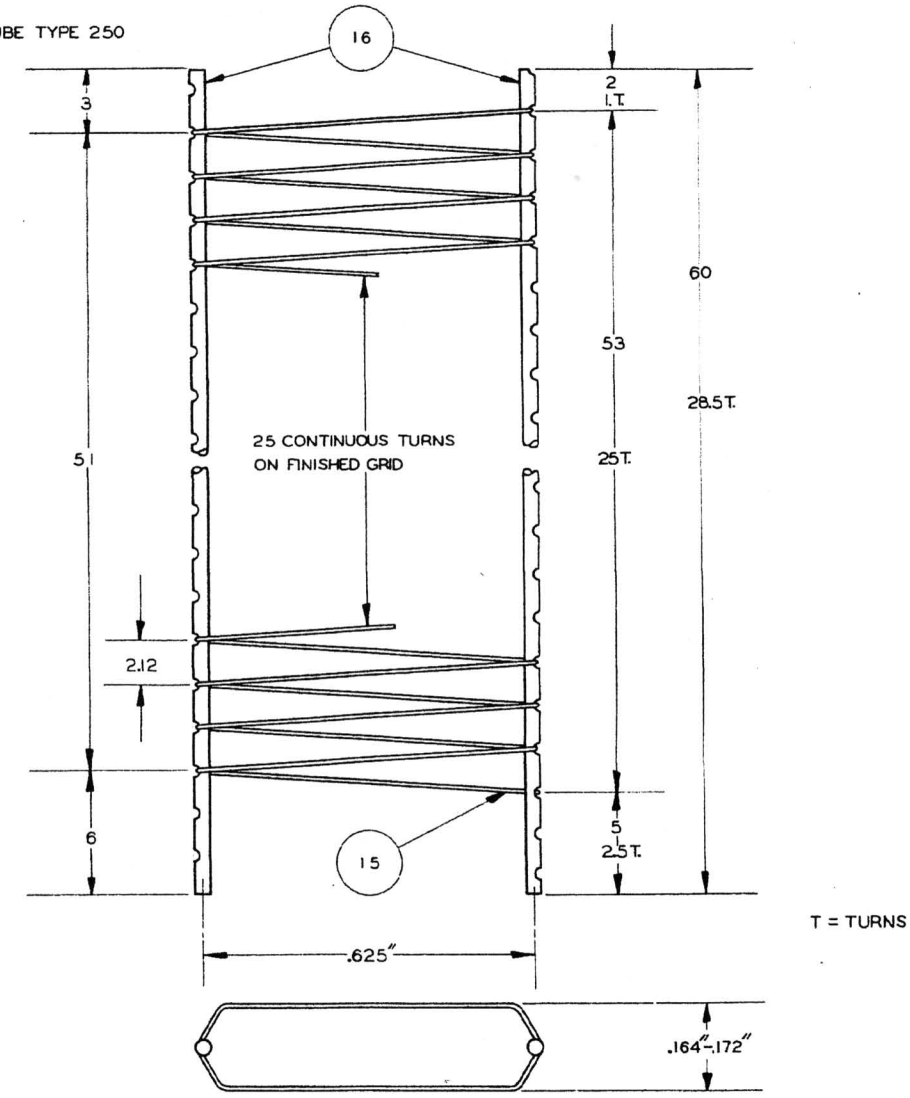

T = TURNS

MATERIAL SPECIFICATIONS

TUBE PART №15 WIRE - - - - - - - - - - - - - - - - - - MOLYBDENUM
1. W.T. LIMITS - (MGS/200 MM.) - - - 26.75 (26-27.5)
2. EQUIVALENT DIAMETER - - - - - - 5.1 MILS
3. MATERIAL PURCHASING SPEC - - 33C - M - 13

TUBE PART №16 GRID SIDE RODS - - - - - - - - - - - 30MIL NICKEL WIRE
1. CUT LENGTH - - - - - - - - - - - - - - - 60MM
2. MATERIAL PURCHASING SPEC - - 33C - N - 5
3. QTY. REQUIRED PER TUBE - - - - 2

TREATMENT
1. FIRED IN HYDROGEN - - - STDZG. NOTICE №8-5-1

MANUFACTURING SPECIFICATIONS
1. GRID SIZE - .168"X.625"
2. T.P.I. (PITCH OF WINDING) - - - - - - - - - - - - - - - 12
3. DIST. BETWEEN TURNS (CENT. TO CENT.) - - - - - 2.12 MM
4. TOTAL TURNS ON WOUND GRID (UNFINISHED) - 28.5
5. APPROX. AMOUNT OF WIRE PER TURN - - - - - - - 37.3MM
6. APPROX. AMOUNT OF WIRE FOR GRID (UNFIN.) - 1063MM
7. LOOSE TURNS - 3.5
8. TOTAL TURNS ON FINISHED GRID - - - - - - - - 25
9. APPROX. AMT. OF WIRE FOR FINISHED GRID - - 933MM
10. APPROX. GRID WIRE LOSS - - - - - - - - - - - - - - 12 %

*Sheet reissued to conform to new notice

★ INDICATES A CHANGE

ALL DIMENSIONS IN MM
UNLESS OTHERWISE SHOWN

SCALE—3:1

DRAWING No. 92S-31068
1-4-109

SECTION— Construction Data
SUBJECT— PLATE SPECIFICATIONS
TUBE TYPE 50

STANDARDIZING NOTICE No. 3-1-50
SUPERSEDES p. 7(3-1-250) 3-2-15
DATED May 25, '29

P-70 PLATE

INITIALLY USED IN TUBES TYPES 81 & 50

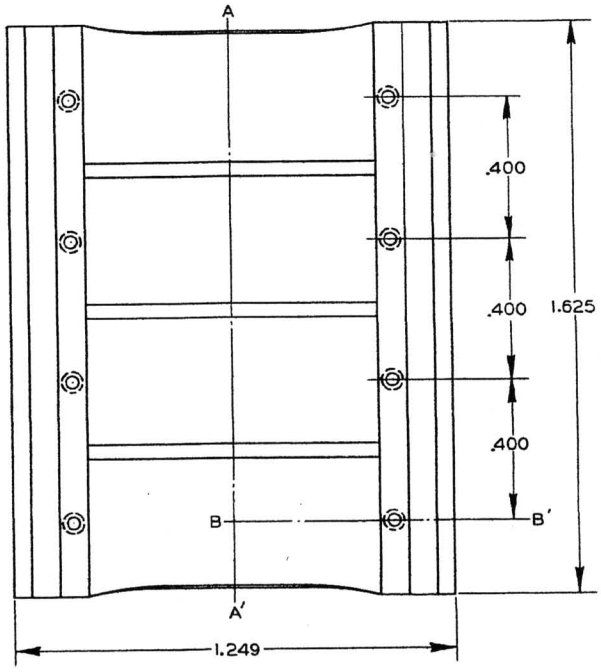

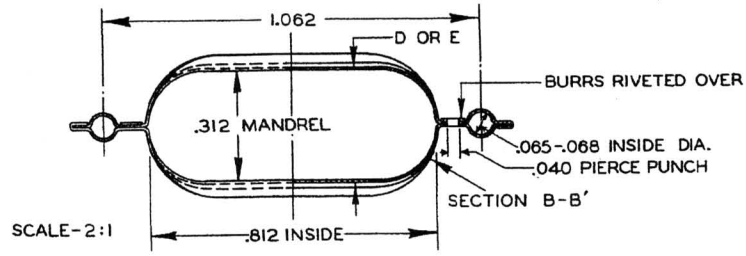

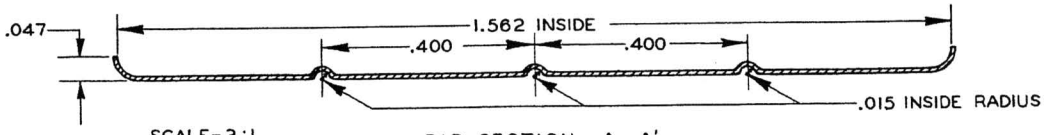

SCALE-3:1

RIB SECTION A-A'

MATERIAL SPECIFICATIONS

1. MATERIAL ---------- .005"X1.625" NICKEL RIBBON.
2. MATERIAL PURCHASING SPECIFICATIONS ---------- STDZG. NOTICE Nº 33C-N-7.

PARTS DIVISION TREATMENT

1. CLEANED IN CARBON TETRACHLORIDE ---------- STDZG. NOTICE Nº34-4-3.
2. CARBONIZING SCHEDULE ---------- STDZG. NOTICE Nº22C-1-1
   A CARBONIZING LIMITS ---------- STDZG. NOTICE Nº22-5-1

PARTS DIVISION INSPECTION LIMITS

1. OUTSIDE THICKNESS ---------- D

TUBE FACTORY INSPECTION LIMITS

1. OUTSIDE THICKNESS ---------- E .323"(.321"-.325")

*Sheet reissued to conform to new notice

★ INDICATES A CHANGE
ALL DIMENSIONS IN INCHES
UNLESS OTHERWISE SHOWN

SCALE—AS SHOWN

DRAWING No. 92S-3515R1
10- 109

Recalled May 23, '34

SECTION—Construction Data
SUBJECT—PLATE SUPPORT ASSEMBLY
TUBE TYPE 50

STANDARDIZING NOTICE No. 3-1-50
Part of Pg. 8(3-1-250)
SUPERSEDES p. DATED May 20, '29

FM-41 PLATE SUPPORT ASSEMBLY

INITIALLY USED IN TUBE TYPE 81

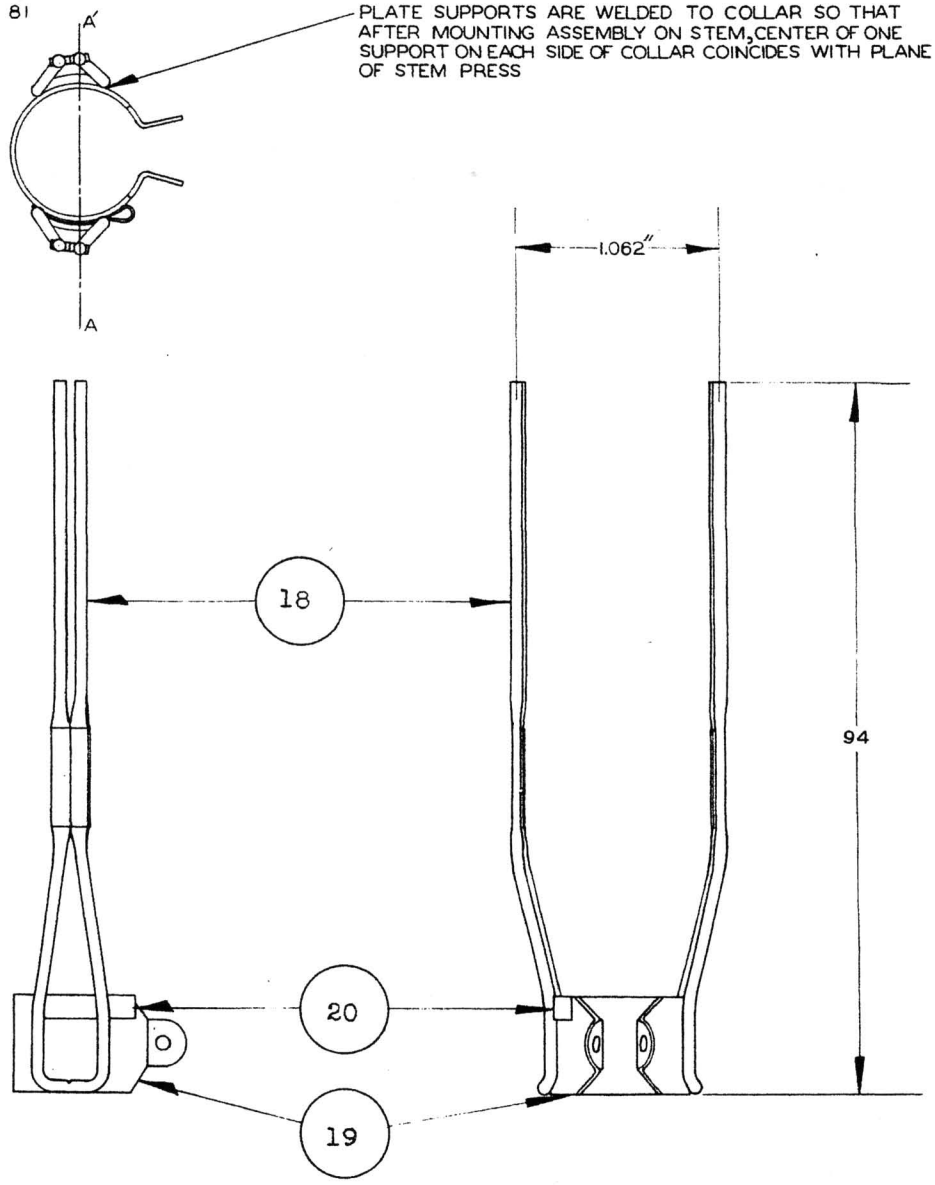

MATERIAL SPECIFICATIONS				
TUBE PART Nº	PART DESCRIPTION	PART SPECIFICATION	QUANTITY PER TUBE	MATERIAL OR MFG. SPEC. STDZG. NOTICE NUMBER
18	PLATE SIDE RODS	W-5	2	13-1-1A
19	STEM COLLAR	R-5	1	13-1-1A
20	PLATE TERMINAL	R-1	1	13-1-1A

*Sheet reissued to conform to new notice

WF 11/14/32

★ INDICATES A CHANGE

R F Radiotron Company, Inc.
415 S. Fifth St., HARRISON, N. J.
STANDARDIZING DEPT.

SECTION— Construction Data
SUBJECT— GETTER ASSEMBLY SPECIFICATIONS
TUBE TYPE 50

STANDARDIZING NOTICE No. 3-1-50
Part of Pg. 8(3-1-250)
SUPERSEDES p. DATED May 20, '29

FZ-21 GETTER ASSEMBLY

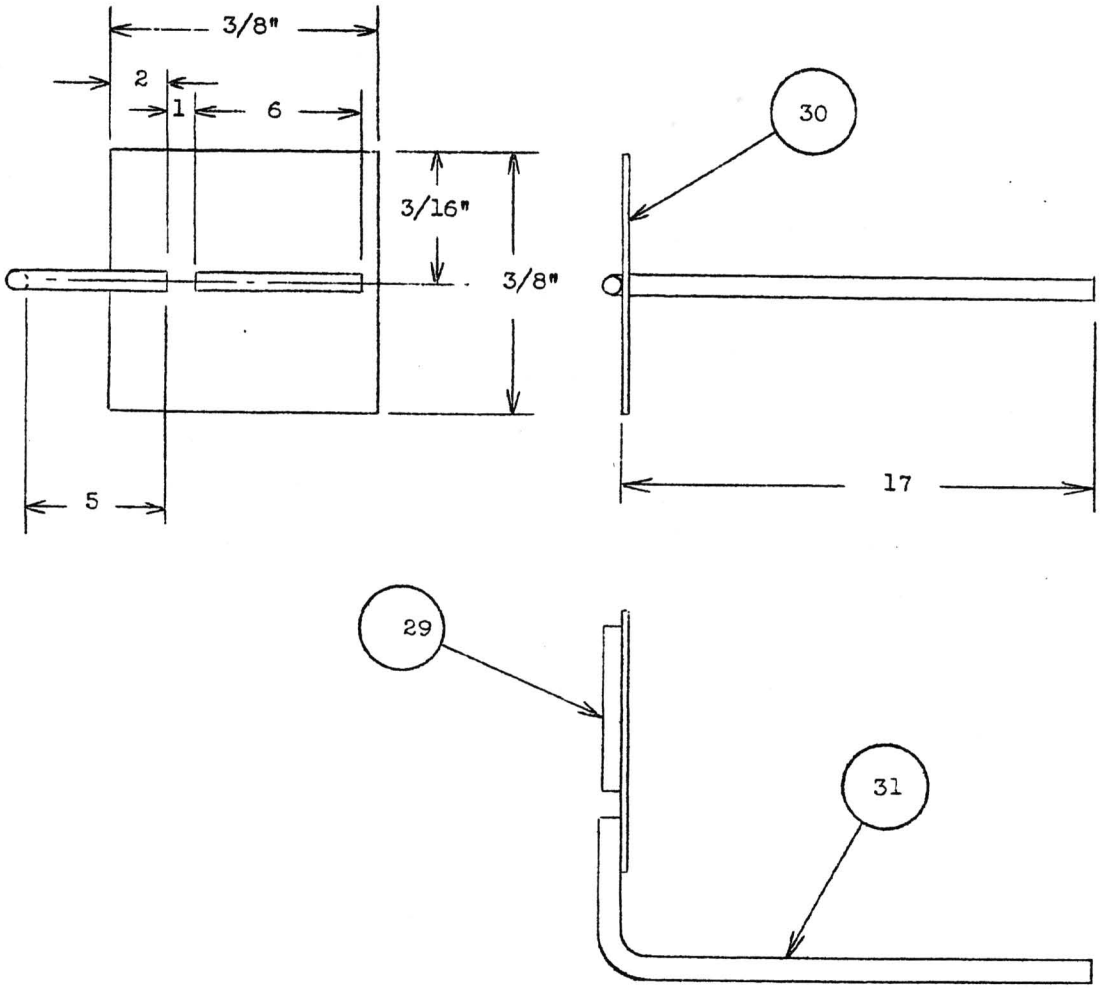

MATERIAL SPECIFICATIONS				
Tube Part No.	Part Description	Part Specification	Quantity per Tube	Mat. or Mfg. Spec. Stdzg. Not. No.
29	Getter	15C-20-1	1	15-1-2
30	Getter Tab	R-10	1	13-1-1A
31	Getter Tab Supp.	W-6	1	13-1-1A

*Sheet reissued to conform to new notice

★ INDICATES A CHANGE
ALL DIMENSIONS IN mm
UNLESS OTHERWISE SHOWN

SCALE— 4:1

DRAWING NO. 92S-31056

SEALING AND EXHAUST SPECIFICATIONS (TENTATIVE)

Sealex - Exhaust - 24 head machine

1. Count Load Position as Number One.
2. Speed of machine - - - - - - - - - - - - - - - - - 40 tubes per hour
3. High Frequency Furnace Output- - - - - - - - - - 75-80 amperes
4. High Frequency Coil Specifications - - - - - - - 19-6-3
   (a) Standard coils in positions as specified below
5. Filament Lighting
   (a) Filament in series with resistance as tabulated below and a 19-21 volt AC line is lighted at 7 positions, 16 to 22 inclusive.

Exhaust Position	Series Fil. Resis.	Approx. Current	H.F. Coil Turns
15	--	--	6 3/4 Helical
16	6.41 ohms	1.4 amps.	6 1/2 "
17	6.46 "	1.4 "	6 1/2 "
18	3.28 "	1.7 "	-- "
19	6.31 "	1.4 "	6 1/4 "
#20	4.98 "	1.5 "	-- "
#21	6.08 "	1.4 "	6 1/2 "
##22	3.31 "	1.7 "	4 1/2 spiral and 3 1/4 helical

#Mercury condensation pumps backed with rotary oil pumps in these positions

##Helical coil on top; spiral on the inside of track and parallel to mount axis located immediately below helical coil

11/14/32

*No change in specifications
Sheet reissued to conform to new notice.

*INDICATES A CHANGE
**INDICATES AN ADDITION

AGING SPECIFICATIONS

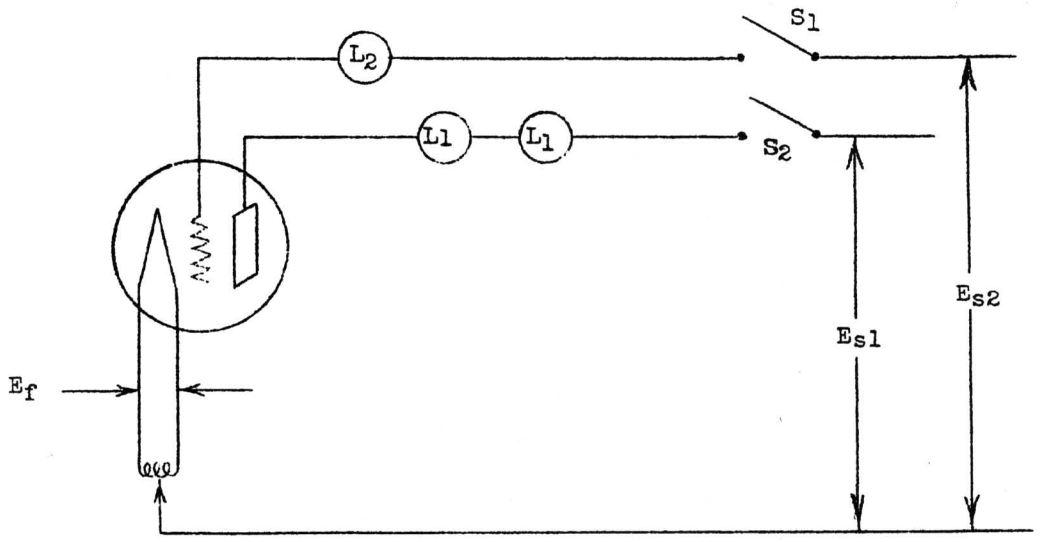

Legend

E_f = Filament Volts
E_{s1} = 440 volts AC Supply
E_{s2} = 150 volts DC Supply
L_1 = 100 watt 220 volt lamps
L_2 = 50 watt 110 volt lamp
S_1 & S_2 = S.P.S.T. Switches

Schedule

E_f	S_1	S_2	Time Minutes
7.5 AC	Open	Closed	3
7.5 AC	Closed	Open	3
7.5 AC	Open	Closed	25

NOTE

Data contained on this page identical to specifications given on page 11, 3-1-250 dated May 20, '29 which was superseded and not replaced Feb. 25, '32

STANDARDIZING DEPT.

SECTION— Construction Data
STANDARDIZING NOTICE No. 3-1-250
SUBJECT— TUBE MARKING, BASE THREADING & PACKING
RCA RADIOTRON UX-50 & CUNNINGHAM CX-50
SUPERSEDES p. 11 DATED May 20, '29

TUBE MARKING SPECIFICATIONS

1. Bulb Marking
   (a) Monogram Design Specifications - - - - - - - Stdzg. Not. No. 27-1-3
      (1) RCA Radiotron Tubes - - - - - - - - 7/16" Reverse RCA Monogram
      (2) Cunningham Tubes- - - - - - - - - - 7/16" Reverse C Monogram

   (b) Application
      (1) Apply monogram to inside top center of bulb.

2. Base Marking

Design RCA-2

Design C-2

   (a) Details of Die Design - - - - - - - - - Stdzg. Not. No. 27-1-1A or 27-1-1B
   (b) Marking Application - - - - - - - - - - Stdzg. Not. No. 27-1-1

BASE THREADING

1. Base Threading Specifications - - - - - - - - - - Stdzg. Not. No. 24-1-2

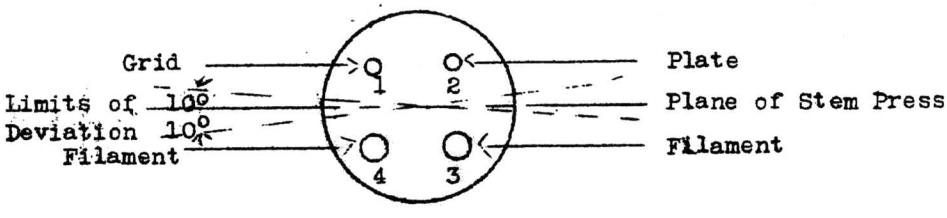

VIEW OF OPEN END OF BASE

PACKING SPECIFICATIONS

1. Specifications for Both Tubes - - - - - - - - - - - Page 3, Stdzg. Not. No. 29-0-2

★ INDICATES A CHANGE
★★ INDICATES AN ADDITION

RCA Radiotron Company, Inc.

415 S. Fifth St., HARRISON, N. J.

STANDARDIZING SECTION
RESEARCH AND DEVELOPMENT LAB.

SECTION— Construction Data
STANDARDIZING NOTICE No. 3-1-50
SUBJECT— CONSOLIDATED LIST OF TUBE PARTS & MATERIALS
TUBE TYPE 50
SUPERSEDES p. DATED

CONSOLIDATED THEORETICAL MATERIAL REQUIREMENTS

Tube Part No.	Page No.	Part Description	Part Designation	Q'ty. per Tube	Quantity per 1000 Tubes
		Bulb			
1	3	Bulb	S21S1 (No. 8 Lime Glass)	1	1000
		Base			
2	3	Base	No. 3302-A	1	1000
3	3	Basing Cement	No. 6	.0085#	8.5 lb.
		Stem			
-	5	Stem Assembly FS-55			
5	5	Flange Tubing	Gauge No. A42 No. 12 Glass	46mm	17.50 lb
6	5	Exhaust Tubing	Gauge No. 18 No. 12 Glass	106mm	3.96 lb
7	5	Lead Wrapping Tubing	Gauge No. 9 or 10 No. 12 Glass	12mm	.21 lb
8	5	Plate Lead	1690D	1	1000
9	5	Filament Spud	164D-3024 Ni. tip	1	1000
10	5	Grid Spud	164D-4025 Ni. tip	1	1000
11	5	Filament Leads	164D-2081-3024 Ni. tip	2	2000
12	5	Grid Lead	164D-2081-4025 Ni. tip	1	1000
		Filament			
		See Miscellaneous Prepared Parts			
		Cathode			
			None Used		
		Grid			
-	7	Grid Assembly FG-242			
15	7	Grid Wire Mo.	26.75(26.0-27.5) mg/200mm	933mm	933 m
16	7	Grid Side Rods	30 mil Ni. wire, cut 60mm lgth	120 mm	1.06 lb.
		Screen Mesh Grid			
			None Used		
		Plate			
17	8	Plate	P-70	1	1000
		Supports			
27	4	Filament Tension Hooks	7-14 B9 Tungsten, Not. 13-1-1	2	2000
28	4	Filament Bottom Hook	7-10 D6 " , " 13-1-1	1	1000
23	4	Flange Collar Mica Insul.	IM-5 Pg.(IM-5), Not. 13-1-1A	1	1000

11/14/32

5-103D

*INDICATES A CHANGE
**INDICATES AN ADDITION

RCA Radiotron Company, Inc.

415 S. Fifth St., HARRISON, N. J.

STANDARDIZING SECTION
RESEARCH AND DEVELOPMENT LAB.

SECTION— Construction Data
STANDARDIZING NOTICE No. 3-1-50
SUBJECT— CONSOLIDATED LIST OF TUBE PARTS & MATERIALS
TUBE TYPE 50
SUPERSEDES p. DATED

CONSOLIDATED THEORETICAL MATERIAL REQUIREMENTS

Tube Part No.	Page No.	Part Description	Part Designation	Q'ty. per Tube	Quantity per 1000 Tubes
		Packing Material			
-	11	Wrapper	EVS21	1	1000
-	11	Instruction Sheet	RC-40515 or RC-40516	1	1000
-	11	Ceullose Crepe Wadding	WV-2412 (1 sheet)	-	175 lb.
-	11	Carton	RC-40515 or RC40517	1	1000
-	11	Single Tube Box	BV-191	1	1000
-	11	Outer Container	BV1912-A	-	84
-	11	Outer Container Label	PF-15, Stdzg.Not. 29-3-2, Pg. 1	-	84
-	11	Glue	" " 33C-G-1	-	-
		MISCELLANEOUS			
		Contact Cap			
			None Used		
		Bead			
-	4	Bead Assembly 625-B	Pg. 2(625-B) Not. 13-1-3		
24	4	Bead Glass	Gauge No. 23 No. 7(G702P)	25mm	2.80 lb
25	4	Anchors	3025 A4 Ni.	4	4000
26	4	Anchors	4025 A4 Ni.	2	2000
		Getter			
-	9	Getter Assembly FZ-21			
29	9	Getter	15C-20-1 (.025" Dia.)	6 mm	.0067 lb
30	9	Getter Tab	R-10	1	1000
31	9	Getter Tab Support	W-6	1	1000
		Miscellaneous Prepared Parts			
-	6	Filament Assembly FF-7			
13	6	Filament Wire	QE13 (50)	180mm	180 m
-	6	Filament Coating	Preparation 14C-22-11	-	11.7 gms.
14	6	Filament Terminals	R-14	2	2000
-	8a	Plate Support Assembly	FM-41		
18	8a	Plate Supports	W-5	2	2000
19	8a	Stem Collar	R-5	1	1000
20	8a	Plate Terminal	R-1	1	1000
21	4	Collar Bolt	1/2" No. 3-48 Round Head Iron Machine Screw	1	1000
22	4	Nut	No. 3-48 Iron Hexagon	1	1000
		Other Miscellaneous			
4	3	Contact Pin Solder	Pure Tin	.0005#	.5 lb.
-	-	Monogram Enamel	-	-	-
-	-	Soldering Flux	-	-	.05 lb.

*INDICATES A CHANGE
**INDICATES AN ADDITION

Form 92S-1218

RCA Radiotron Company, Inc.
415 S. Fifth St., HARRISON, N. J.

PAGE NO.— 1
DATE— Jan. [illegible]

Tentative Data

STANDARDIZING SECTION
RESEARCH AND DEVELOPMENT LAB.

Developmental

RECALLED AND FILED DEC 28 1937

STANDARDIZING NOTICE No. 3 P-1236A
(3712.6-1)

SUBJECT— INDEX (DEVELOPMENT SPECIFICATIONS)
TUBE TYPE A-236-A (92-52)

SUPERSEDES p. 1 DATED July 25, 34

Incorporated in the succeeding pages of these Developmental Specifications are tentative instructions for the manufacture of tube type A-236-A

Specifications contained herein are tentative in character and may change rapidly with developmental procedure; therefore, any orders based on these specifications for equipment of large amounts of material should be verified in order to determine the status of the items required.

Tube Ratings

Filament Volts - 7.5
Filament Amperes - 1.25
Plate Volts
Grid Volts

D.C. Output

*INDICATES A CHANGE
**INDICATES AN ADDITION

REASON FOR CHANGES:-

SHEET APPROVED BY			
NAME	DATE	NAME	DATE
	7/23/34		
Whiteman	7/24/34		

RESEARCH AND DEVELOPMENT LABORATORY

MASTER SPECIFICATION SHEET

TUBE TYPES
A236
ARMY VT52

TUBE TYPE VT 52

PUBLISHED CHARACTERISTICS

OPERATING CONDITIONS						RATINGS						
Ef A.C. VOLT	Eb VOLT	Ec VOLT		Rp OHMS	NOTE	Ib MA.	μ	Sm μMHO	rp OHMS		P.O. WATT	If AMP.
7.0	220	-42		3800		29	3.6	2000	1800		1	1.18

PREHEATING CONDITIONS

	EfAC	Eb	Ec	Rg		NOTE
A B C	7.0	220	-42	1MEG §		

LIFE TEST OPERATING CONDITIONS

EfAC	Eb	Ec			NOTE
7.0	220	-42			

LIFE TEST CLASSIFICATIONS

A	READ AT ALL PERIODS
B	READ AT INITIAL & FINAL PERIODS ONLY
C	READ INITIALLY ONLY
D	READ ONLY ON REQUEST

TYPE - - - POWER AMPLIFIER
BULB - - - ST16
BASE - - - 3302A

SHEET Nº 92S- 5600
DATE :-
SUPERSEDES Nº 92S-
DATED :-

BASING	
PIN Nº	ELEMENT
1	G
2	P
3	F
4	F

OVERALL LENGTH

MFG. 5-1/32" 5-9/32"
PUB. § 5-3/8" MAX.

CAPACITANCES

C(GRID-PLATE) - 7.7 μμf.
C(INPUT)------- 5 μμf.
C(OUTPUT)------ 3 μμf.

CHARACTERISTICS AND QUALITY RATINGS

TEST CONDITIONS								PREHEATING CONDITION	LIFE TEST CLASS				INSPECTION			NOTE
Ef D.C. VOLT	Eb VOLT	Ec VOLT			Eg RMS MAX	Rg § MEG.	Ib MA.		A	B	C	D	RECORD	10% FACT.	100% FACT.	
5.5	50	50			-	-	-	A	-	-	-	-	X	X	X	-
7.0	220	-40			-	-	-	A	X	-	-	-	X	X	X	-
7.0	220	-40			2	-	-	A	-	X	-	-	X	-	-	4
7.0	220	-40			2	-	-	A	-	X	-	-	X	-	-	4
7.0	220	-40			2	-	-	A	-	X	-	-	X	-	-	4
7.0	220	VARY			-	1 §	25	-	X	-	-	-	X	X	X	1
7.0	100	VARY			-	-	-	A	-	X	-	-	X	X	X	2
7.0	-	-			-	-	-	A	-	-	X	-	X	-	-	4
-	-	SEE	NOTE	3	-	-	-	-	-	X	-	-	X	-	-	3,4
-	-	-			-	-	-	-	-	-	-	X	-	-	-	-
-	-	-			-	-	-	-	-	-	-	X	-	-	-	-
-	-	-			-	-	-	-	-	-	-	X	-	-	-	-
6.0	50	50			-	-	-	-	X	-	-	-	-	-	-	-

TESTS	READ	UNIT	LIFE TEST END POINT			LIMITS						
TESTS TO BE MADE IN FOLLOWING SEQUENCE			504 HOURS MIN. AV.	504 HOURS	1008 HOURS	CUSTOMER MIN.	FACTORY MIN.	ZONE MIN.	BOGIE	ZONE MAX.	FACTORY MAX.	CUSTOMER MAX.
EMISSION	Ils	MA.	-	-	-	50	75 §	-	-	-	-	-
PLATE CURRENT	Ib	MA.	-	-	-	24	24	-	29	-	34	34
AMPLI. FACTOR	μ	-	-	-	-	3.2	3.2	-	3.6	-	3.9	3.9
PLATE RESISTANCE §	rp	OHM	-	-	-	1550	1550	-	1800	-	2200	2200
TRANSCONDUCTANCE	Sm	μMHO	-	-	-	1600	1600	-	2000	-	2400	2400
REV. GRID CURR. (GAS)	-Ic	μA.	-	10	-	-	-	-	-	-	3 §	10
SECONDARY EMISSION	Ic	MA.	-	-	-	-	-	SEE	NOTE	2	-	-
FILAMENT CURRENT	If	AMP.	-	-	-	1.11	1.11	-	1.18	-	1.25	1.25
INSULATION RESIST.	I.R.	MEG.	-	-	-	10	10	-	-	-	-	-
CAPACITANCE	C(gp)	μμf.	-	-	-	6.74	6.74	-	7.7	-	8.66	8.66
CAPACITANCE	C(IN)	μμf.	-	-	-	-	-	-	5	-	-	-
CAPACITANCE	C(OUT)	μμf.	-	-	-	-	-	-	3	-	-	-
EMISSION	2Is	MA.	-	50	-	-	-	-	-	-	-	-

TRANSCRIPT OF ARMY SPECIFICATION NO. 71-752 DATED 12-5-33.

§ INDICATES RCA ADDITIONS OR CHANGES

✳ INDICATES A CHANGE

NOTES:-(1) READING TO BE TAKEN AFTER 2 MINUTES. (2) VARY Ec FROM 0 TO +50 VOLTS. GRID CURRENT SHALL NOT REVERSE AND FLOW NEGATIVELY. (3) MEASURE BETWEEN 3 ELEMENTS. USE 500 VOLT MEGGER, TUBE TO BE COLD. (4) TEST ON ONE PERCENT OF (NOT LESS THAN 10) TUBES, SELECTED AT RANDOM BY INSPECTOR. IF MORE THAN 10% OF TUBES TESTED FAIL IN ANY TEST, ALL TUBES ON ORDER TO BE TESTED.

RCA Radiotron Company, Inc.
415 S. Fifth St., HARRISON, N.J.

Dev. SE NO.- 2
DATE- Aug. 24, '34

STANDARDIZING SECTION
RESEARCH AND DEVELOPMENT LAB.
STANDARDIZING NOTICE No. 3-2-A236A
SUPERSEDES p.
DATED

Recalled 11/23/37

3711.3.7

1-348-23-2

RFS1712-53

FORM Nº 825-1355

FORM 9906

RCA Radiotron Division
RCA MANUFACTURING COMPANY, INC.
STANDARDIZING SECTION
RESEARCH AND DEVELOPMENT LAB.

SUBJECT

DATE PAGE

STANDARDIZING NOTICE

Recalled 11-10-37
(3711-3-7)

SUPERSEDED DATE

COMPLETE TUBE ASSEMBLY

OVERALL LENGTH A		BOGIE	MIN.	MAX.
MFG.	INCHES	$5\frac{3}{16}$	$5\frac{1}{32}$	$5\frac{9}{32}$
	MM	131.8	127.8	134.2
PUB.	INCHES			$5\frac{3}{8}$
	MM			136.5

DIMENSION B		BOGIE	MIN.	MAX.
MFG.	INCHES	$4\frac{9}{16}$	$4\frac{13}{32}$	$4\frac{21}{32}$
	MM	116	112	118.3
PUB.	INCHES			$4\frac{3}{4}$
	MM			120.7

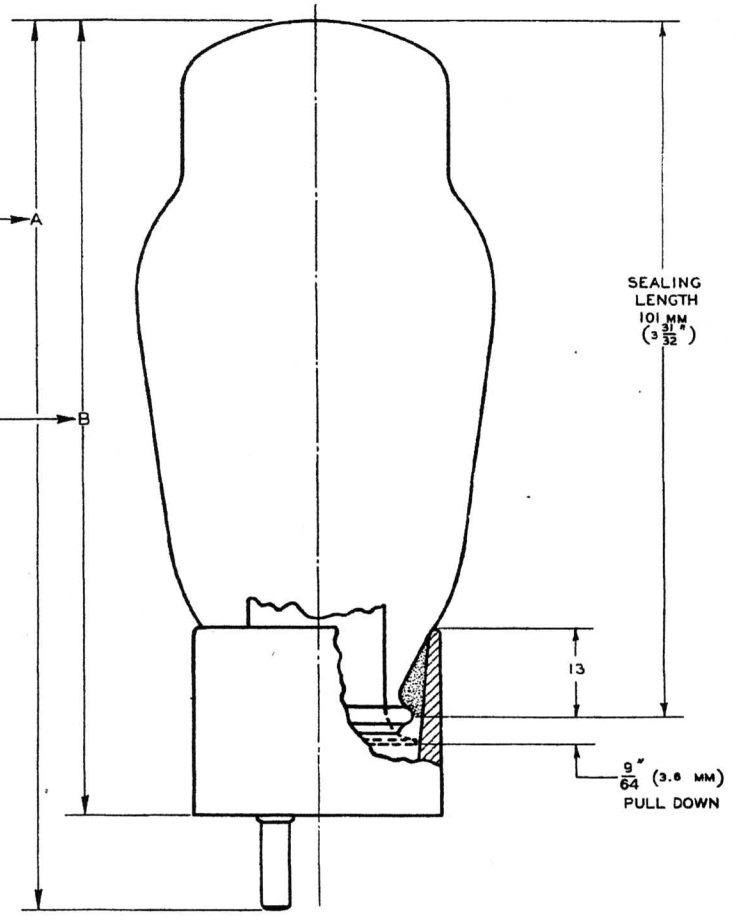

RCA STANDARD BASE THREADING SPECIFICATIONS

BOTTOM VIEWS OF BASED TUBE-NUMBERING OF PINS IS RCA STANDARD

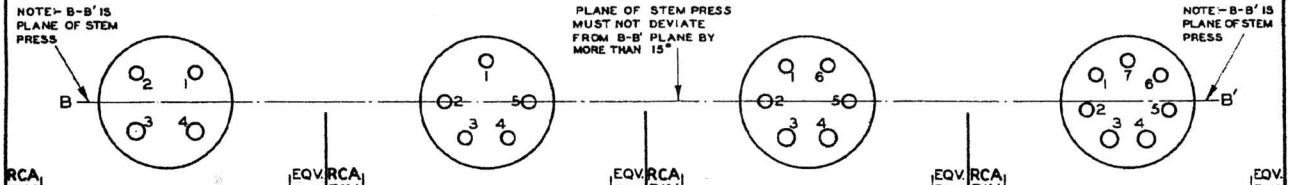

RCA PIN Nº	4 PIN BASE	EQV. RMA Nº	RCA PIN Nº	5 PIN BASE	EQV. RMA Nº	RCA PIN Nº	6 PIN BASE	EQV. RMA Nº	RCA PIN Nº	7 PIN BASE	EQV. RMA Nº
1		3	1		3	1		3	1		3
2		2	2		2	2		2	2		2
3		1	3		1	3		1	3		1
4		4	4		5	4		6	4		7
			5		4	5		5	5		6
						6		4	6		5
									7		4

NOTE—BASE USED ON THIS TYPE INDICATED BY COLUMN SPECIFYING THREADING

TUBE MARKING

1. INSCRIPTION AND APPLICATION SPECIFICATIONS ---------- STDZG. NOTICE Nº 27-1-1A

*INDICATES A CHANGE

*Data revised.

ALL DIMENSIONS IN MM
UNLESS OTHERWISE SHOWN

SCALE— 1:1
ST16A-02 OR 06

DRAWING No. 92S-36181

TROLLEY EXHAUST SCHEDULE

1. Equipment

   (a) 10-port glass manifold exhaust position.
   (b) High frequency furnace.
   (c) High frequency coil.

2. Schedule

   (a) Place tubes on manifold and exhaust to preliminary vacuum line and test for leaks with spark coil.
   (b) Exhaust tubes on mercury pump and test for leaks with McLeod or Pirani gauge.
   (c) Lower oven and bake out tubes at 360°C for 15 minutes. Raise oven.
   (d) Light the filaments at I_f = 1.0 amp. for 10 seconds.
   (e) Light the filaments at I_f = 1.5 amp. Apply high frequency for 10 seconds. The high frequency is applied so that the plate never exceeds a dull red color. Caution: DO NOT FLASH GETTER
   (f) Repeat step (e) for 10 seconds.
   (g) Repeat step (e) for 10 seconds.
   (h) Light filaments at I_f = 1.8 amp. for 10 seconds.
   (i) Repeat step (e) for 10 seconds, except I_f = 1.8 amp.
   (j) Repeat step (i) for 10 seconds.
   (k) Repeat step (i) for 10 seconds.
   (l) Repeat step (h) for 10 seconds.
   (m) Light filaments at I_f = 1.3 amp. and continue until the pressure is below 0.5 micron.
   (n) With filaments still lighted at I_f= 1.3 amp. flash the getter. Shut off filaments.
   (o) Tip off tubes immediately.

RCA Radiotron Company, Inc.
415 S. Fifth St., HARRISON, N. J.

PAGE NO.— 6
DATE— Dec. 13, '34

STANDARDIZING SECTION
RESEARCH AND DEVELOPMENT LAB.

Tentative Data

Developmental Recalled 11/10/37

STANDARDIZING NOTICE No. 3-2-A236A
(3711-3-7)

SUBJECT— AGING SPECIFICATIONS
TUBE TYPE A-236-A

SUPERSEDES p. DATED

AGING SPECIFICATIONS

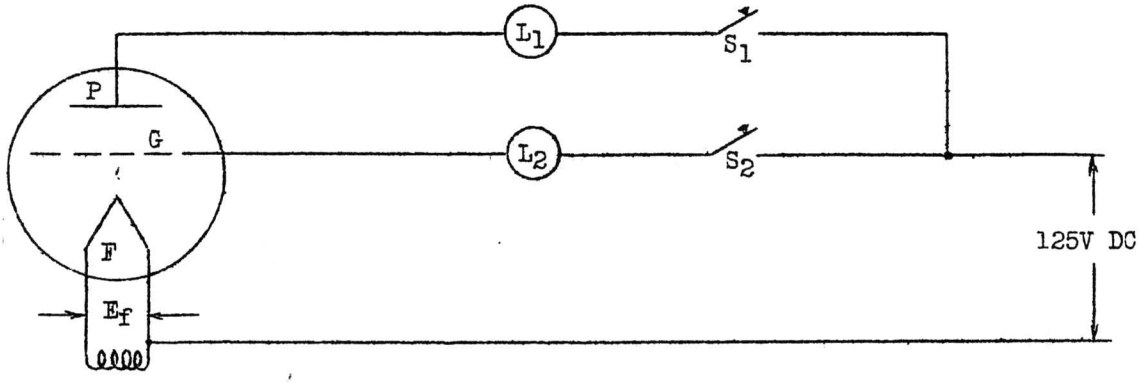

LEGEND

F = Filament
G = Grid
P = Plate
L_1 = 10W 120V Lamp
L_2 = 10W 120V Lamp
S_1 = Switch
S_2 = Switch

SCHEDULE

Step No.	E_f Volts	S_1	S_2	Time
1	7.0	Open	Closed	5 min.
2	7.0	Closed	Open	15 min.

*INDICATES A CHANGE
**INDICATES AN ADDITION

RCA Radiotron Company, Inc.
415 S. Fifth St., HARRISON, N. J.

DATE— Nov. 30, '34

Tentative Data

STANDARDIZING SECTION
RESEARCH AND DEVELOPMENT LAB.

Developmental

STANDARDIZING NOTICE No. 3-2-A236A

SUBJECT— CONSOLIDATED LIST OF TUBE PARTS & MATERIALS
TUBE TYPE A-236-A

SUPERSEDES p. 7 DATED July 23, '34

Stdzg. Notice Reference	Part Description	Part Designation	Q'ty. per Tube	Quantity per 1000 Tubes
	1. BULB			
17-7-2	Bulb	ST16A4 or A5 (No. 8 Lime)	1	1000
	2. BASE			
24-1-1	Base	3302-A	1	1000
24-2-6	Basing Cement	No. 6	.0085#	8.5 lb.
	3. STEM			
12-1-0	Stem Assembly	FS-331 (Weld Cup WC-5)		
10-1-1A	Flange Tubing	42B(42B-43B) No. 12 Glass	48.5mm	19.88 lb
10-1-1A	Exhaust Tubing	Gauge No. 19 No. 12 Glass	106mm	4.37 lb.
13-1-1	Filament Spuds	25-9.5A7 Ni.	2	2000
13-1-1	Grid Spud	25-24.5A7 Ni.	1	1000
13-1-1	Back Spud	25-51.5A7 Ni.	1	1000
13-1-1	Plate Spud	30-48.5A7 Ni.	1	1000
11-1-1	Filament Leads	164D-2081-2024 Ni.	2	2000
11-1-1	Grid Lead	164D-2081-2524 Hard Ni.	1	1000
11-1-1	Plate Lead	164D-2074-3048 Ni.	1	1000
	4. FILAMENT AND CATHODE			
14-1-1A	Filament Assembly	FF-59		
14C-3-1	Filament Base Ribbon	Type F-17 (cut lgth 180mm)	180mm	180m
14C-22-20	Filament Coating	Preparation 14C-22-20	15-18mg	16.5g
	5. GRIDS			
8-1-1	Grid Assembly	FG-2407		
33C-M-13	Grid Wire 5.1 mil Mo.	26.75(26.0-27.5)mg/200mm	696mm	696m
33C-N-5	Grid Side Rods	30 mil Ni. Wire (cut 37.7mm)	75.4mm	.6635 lb.
	6. PLATE			
9-1-1	Plate Assembly	FM-429		
9-1-1	Plate	P-502-A	1	1000
	7. GETTER			
→ 15-1-1	Getter Assembly	*FZ-143		
15-1-0	Getter Pellet	Z-5	1	1000
13-1-1A	Getter Tab	R-72	1	1000
→ 13-1-1A	Getter Tab Support	W-78	*2	*2000
13-1-1A	Getter Retaining Mesh	L-1	1	1000
	8. MICA			
13-1-2	(A)-Mica Assembly	FM-426		
13-1-1A	(A1)-Mica Spacer	IM-342	1	1000
13-1-1A	(A2)-Spacer Strap	R-256	2	2000
13-1-1A	(B)-Bulb Wing Mica	IM-235	2	2000

DEC 3 1934

*INDICATES A CHANGE
**INDICATES AN ADDITION

STANDARDIZING SECTION
RESEARCH AND DEVELOPMENT LAB.

SECTION-
SUBJECT- INDEX (DEVELOPMENT SPECIFICATIONS)
TUBE TYPE A181

STANDARDIZING NOTICE No. 3-2-A181
SUPERSEDES p. 1 DATED Aug. 5 '32

Incorporated in the succeeding pages of these Developmental Specifications are tentative instructions for the manufacture of tube type A181

Specifications contained herein are tentative in character and may change rapidly with developmental procedure; therefore, any orders based on these specifications for equipment or large amounts of material should be verified in order to determine the status of the items required.

Tube Ratings

Filament Volts - 2.5V.
Filament Amperes - 1.75
Plate Volts
Grid Volts

D.C. Output

Commercial Designation Assigned Type 2A3

TUBE TYPE 2A3

PUBLISHED CHARACTERISTICS

OPERATING CONDITIONS					RATINGS						
C.	E_b (MAX.)	E_{C1}		R_p	NOTE	I_b	μ	S_m	r_p	DIST.%	I_f	U.P.O.
						SINGLE-STAGE AMPLIFIER						
	250	-45		2500		60	4.2	5250	800	5.0	2.5	3.5
						PUSH-PULL AMPLIFIER (CLASS A)						
	300	-62		3000	1	40	4.0	4000	1000	2.5		15
	300	-62		5000	2	40	4.0	4000	1000	5.0		10

PREHEATING CONDITIONS

	$E_{f\,A.C.}$	E_b	E_{C1}	E_{C2}	E_h	NOTE
A	2.5	240	-45			3
B						
C						

LIFE TEST OPERATING CONDITIONS

	$E_{f\,A.C.}$	E_b	E_{C1}	E_{C2}	E_h	NOTE
	2.5	300	-60			

CLASS	LIFE TEST CLASSIFICATIONS
A	READ AT ALL PERIODS
B	READ AT INITIAL & FINAL PERIODS ONLY
C	READ INITIALLY ONLY
D	READ ONLY ON REQUEST

TYPE - - POWER AMPLIFIER TRIODE
BULB - - ST16
BASE - - 3306A
CATHODE - COATED FIL.

SHEET Nº 92S-5304
DATE: MAY 10, 1933
SUPERSEDES Nº 92S-
DATED:

BASING	
PIN Nº	ELEMENT
1	GRID
2	PLATE
3	FILAMENT
4	FILAMENT

OVERALL LENGTH

MANUFACTURING $5\frac{1}{32}'' \; 5\frac{9}{32}''$
PUBLISHED - - - - $5\frac{3}{8}''$ MAX.

CAPACITANCES

C(GRID-PLATE) - 13 μμf
C(INPUT) - - - - 9 μμf
C(OUTPUT) - - - - 4 μμf

CHARACTERISTICS AND QUALITY RATINGS

TEST CONDITIONS							PREHEATING CONDITION	LIFE TEST CLASS A	B	C	D	INSPECTION RECORD	BELT	100% FACT.	NOTE
E_b D.C. VOLTS	E_{C1} D.C. VOLTS	E_{C2} D.C. VOLTS	E_h D.C. VOLTS	SIGNAL V. 60~ R.M.S.	R_p OHMS P.F.=1										
							A			✓		✓			
300	-60						A	✓				✓	✓	✓	7
300	-60							✓				✓			4
300	-60			-			A		✓			✓	✓	✓	
300	-60						A		✓			✓			
300	-60						A		✓			✓			
300	-60						A		✓			✓			
300	-60			40.0	1100		A	✓				✓	✓	✓	
250	-43.5			30.8	2500		A				✓	✓			
20	20						A	✓				✓	✓	✓	
1000 RMS.	0										✓				5
															6

TESTS	READ	UNIT	LIFE TEST END POINT 504 HOURS MIN. AV.	504 HOURS	1008 HOURS	LIMITS CUSTOMER MIN.	FACTORY MIN.	ZONE MIN.	BOGIE	ZONE MAX.	FACTORY MAX.	CUSTOMER MAX.
TESTS TO BE MADE IN FOLLOWING SEQUENCE												
FIL. CURRENT	I_f	AMP.				2.25	2.35	2.40	2.50	2.60	2.65	2.75
GAS	I_{GAS}	μA.								.5	2.0	3.0
GRID LEAKAGE	I_L	μA.									1.0	
PLATE CURRENT	I_b	MA.				22.5	28	34	40	46	52	57.5
AMPLIF. FACTOR	μ					3.7	3.8	3.9	4.0	4.1	4.2	4.3
PLATE RESIST.	r_p	OHM				800	850	925	1000	1100	1225	1350
TRANSCONDUCT.	S_m	μMHO				3200	3450	3750	4000	4250	4550	4800
A.C. OUTPUT	A.C.	VOLT	66	61.5	55	69	70	73	76.5			
POWER OUTPUT	P.O.	WATT	2.7	2.3	1.8	2.7	2.9	3.2	3.5			
EMISSION	I_s	MA.				90	100	105				
INSULATION TEST												
CAPACITY	CAP.	μμf							♦			

① WITH FIXED BIAS. ② WITH SELF BIAS. ③ ONE QUARTER MEGOHM IN GRID CIRCUIT OF EACH TUBE. ④ TO BE READ ONLY WHEN GAS EXCEEDS ONE MICROAMPERE. ⑤ VOLTAGE APPLIED BETWEEN PLATE AND GRID WITH FILAMENT COLD. ANY STEADY ARCING SUFFICIENT FOR REJECTION. ⑥ READ ON 5 TUBES PER MONTH. ⑦ ONE HALF MEGOHM IN GRID CIRCUIT.

♦ INDICATES A CHANGE
♦ AS RECORDED

415 S. Fifth St., HARRISON, N. J.
STANDARDIZING SECTION
RESEARCH & DEVELOPMENT LAB. STANDARDIZING NOT. No. 3-2-A1
DATE-7-8-33
SUPERSEDES p.
DATED

RCA Radiotron Company, Inc.
415 S. Fifth St., HARRISON, N. J.

DATE— Jan. 23, '33

STANDARDIZING DEPT.

SECTION—

STANDARDIZING NOTICE No. 3-2-A181

SUBJECT—COMPLETE TUBE ASSEMBLY
TUBE TYPE A-181

SUPERSEDES p. DATED

COMPLETE TUBE ASSEMBLY

DIMENSION A		BOGIE	MIN.	MAX.
MFG.	INCHES	$5\frac{3}{16}$	$5\frac{1}{32}$	$5\frac{9}{32}$
	MM	131.8	127.8	134.2
PUB.	INCHES			$5\frac{3}{8}$
	MM			136.5

DIMENSION B		BOGIE	MIN.	MAX.
MFG.	INCHES	$4\frac{9}{16}$	$4\frac{13}{32}$	$4\frac{21}{32}$
	MM	116	112	118.3
PUB.	INCHES			$4\frac{3}{4}$
	MM			120.7

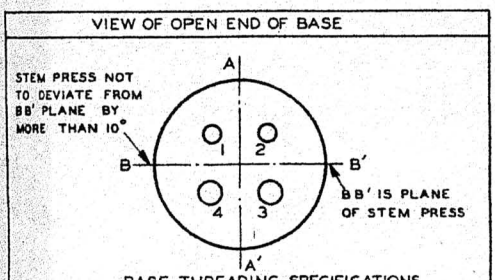

BASE THREADING SPECIFICATIONS

PIN Nº	ELEMENTS	PIN Nº	ELEMENTS
1	Grid	3	Filament
2	Plate	4	Filament

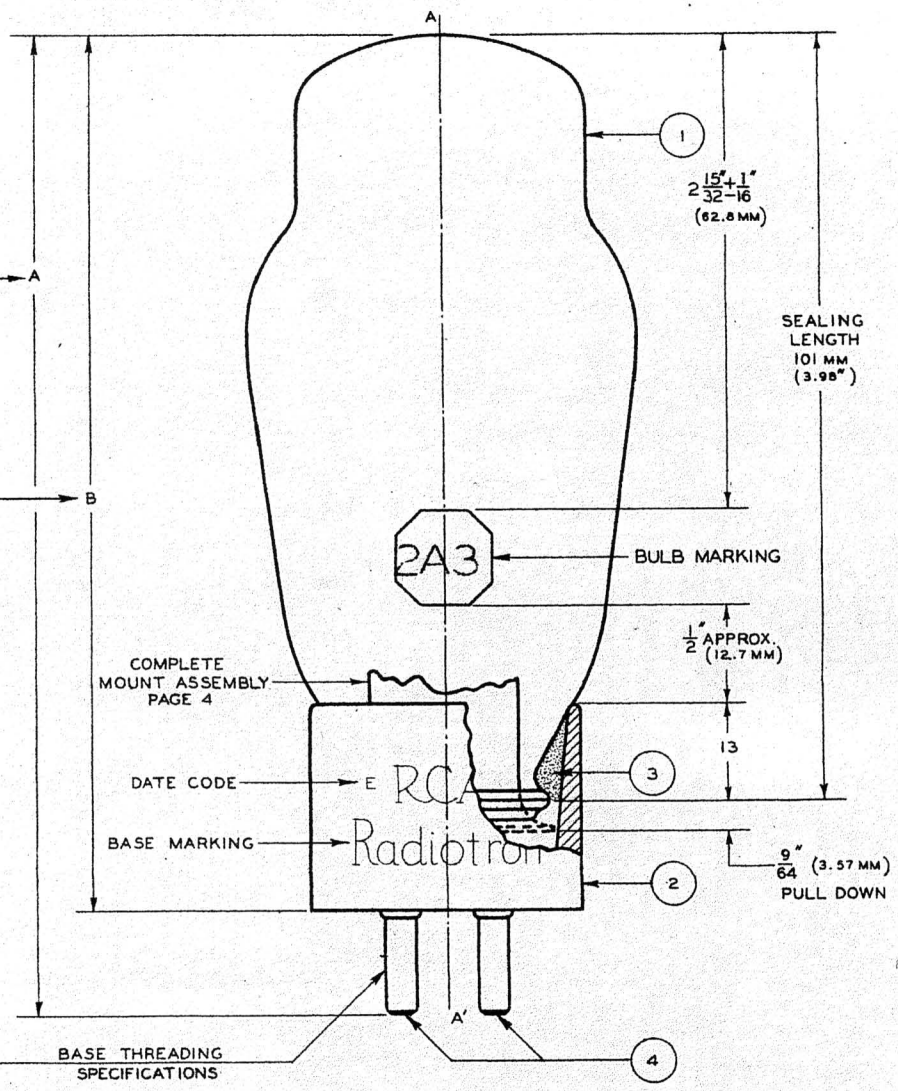

BULB MARKING
1. MARKING DESIGN AND APPLICATION SPECIFICATIONS----------STANDARDIZING NOTICE Nº27-1-5
2. FACTORY CODE IDENTIFICATION----------STANDARDIZING NOTICE Nº27-1-9

BASE MARKING
1. MARKING DESIGN AND APPLICATION SPECIFICATIONS----------STANDARDIZING NOTICE Nº27-1-1
2. DATE CODE MARKING----------STANDARDIZING NOTICE Nº27C-3-2

PACKING
A. FACTORY AND SERVICE WAREHOUSE PACKING SPECIFICATIONS-------PAGE 3 STANDARDIZING NOTICE Nº29-0-2

MATERIAL SPECIFICATIONS

TUBE PART Nº	PART DESCRIPTION	PART SPECIFICATION	QUANTITY PER TUBE	MATERIAL OR MFG. SPEC. STDZG. NOTICE NUMBER
1	BULB	ST16 A2	1	17-7-2
2	BASE	Nº 3306-A	1	24-1-1
3	BASING CEMENT	Nº ~~X~~ 6	.0085 LBS.	24-2-~~X~~ 6
4	CONTACT PIN SOLDER	PURE TIN		33C-5-3

★ INDICATES A CHANGE

ALL DIMENSIONS IN MM

STANDARDIZING SECTION
RESEARCH AND DEVELOPMENT LAB.

Tentative Data — Developmental

STANDARDIZING NOTICE No. 3-2-A181

SUBJECT— CONSOLIDATED LIST OF TUBE PARTS & MATERIALS
TUBE TYPE A-181 (2A3)

SUPERSEDES p. 7 DATED Nov. 27, '33

Stdzg. Notice Reference	Part Description	Part Designation	Q'ty per Tube	Quantity per 1000 Tubes
	1. BULB			
17-7-1	Bulb	ST16A4 or A5 (No. 8 Lime)	1	1000
	2. BASE			
24-1-1	Base	3306-A	1	1000
24-2-6	Basing Cement	No. 6	.0085#	8.5 lb.
	3. STEM			
→ 12-1-0	Stem Assembly	*FS-187 (Weld Cup WC-59)		
10-1-1A	Flange Tubing	43A(42C-43B) No. 12 Glass	45.0mm	18.9 lb
10-1-1A	Exhaust Tubing	Gauge No. 19 No. 12 Glass	106mm	4.37 lb
11-1-1	Grid Spud	164D-3024 Ni.	1	1000
11-1-1	Plate Spud	164D-3056 Ni.	1	1000
11-1-1	Filament Leads	164D-2081-2524 Hard Ni.	2	2000
11-1-1	Grid Lead	164D-2081-3024 Ni.	1	1000
11-1-1	Plate Lead	164D-2074-3056 Ni.	1	1000
	4. FILAMENT AND CATHODE			
14-1-1A	Filament Assembly	FE-8		
14C-3-1	Filament Wire Nickel	6.7(6.5-6.9)mg/200mm	972mm	.0684 lb
33C-N-5	Filament Side Rods	25 mil Ni. Wire	37.8mm	.23 lb
14C-22-3	Coating	Preparation 14C-22-3	4.5-6.5 mg	5.5 gm
	5. GRIDS			
8-1-1	Grid Assembly	FG-267		
33C-M-13	Grid Wire Mo.	36.80(35.7-37.9)mg/200mm	1279mm	1279m
33C-N-5	Grid Side Rods	40 mil Ni. Wire	87.4mm	1.3722 lb
	6. PLATE			
9-1-1	Plate	P-516-A	1	1000
	7. GETTER			
→ 15-1-1	Getter Assembly	*FZ-48		
15-1-0	Getter Pellet	Z-5	1	1000
13-1-1A	Getter Tab	R-72	1	1000
→ 13-1-1A	Getter Tab Support	W-78	**2	2000
13-1-1A	Getter Mesh Strap	L-1	1	1000
	8. MICA			
→ 13-1-2	Mica Assembly (Top)	*FM-258	1	1000
→ 13-1-2	Mica Assembly (Bottom)	*FM-168	1	1000
13-1-1A	Mount Spacer Mica	IM-235	2	2000

*INDICATES A CHANGE

STANDARDIZING SECTION
RESEARCH AND DEVELOPMENT LAB.

Tentative Data

Developmental

STANDARDIZING NOTICE No. 3-2-A181

SUBJECT— CONSOLIDATED LIST OF TUBE PARTS & MATERIALS
TUBE TYPE A-181

SUPERSEDES p. 7a DATED Oct. 6, '33

Stdzg. Notice Reference	Part Description	Part Designation	Q'ty per Tube	Quantity per 1000 Tubes
	9. MISCELLANEOUS SUPPORTS			
13-1-1A	Filament Tension Springs	W-88	2	2000
	10. MISCELLANEOUS MATERIAL			
33C-S-3	Contact Pin Solder	Pure Tin	.0005#	.5 lb.
27C-1-1	Monogram Enamel	-	-	-
→ 29-0-0 Page 1	**11. PACKING For packing procedure see packing index, Stdzg. Notice No. 29-0-0 page 1.			

*INDICATES A CHANGE

STANDARDIZING SECTION
RESEARCH AND DEVELOPMENT LAB.

SECTION—
SUBJECT— REFERENCE PAGE
DEV. TUBE TYPE A-281

STANDARDIZING NOTICE No. 3-2-A181

SUPERSEDES p. DATED

The table here presented gives a complete list of Standardizing Notice references for detailed manufacturing specifications on all tube parts or assemblies specified on the preceding pages of this Standardizing Notice.

Tube Part or Assembly Designation	Description	Part Manufactured By	Stdzg. Notice No.	Page
-	Bases	Outside	24-1-1	-
-	Bulb	Outside	17-7-2	-
W	Formed Wire Parts	Parts Dept.	13-1-1A	10
R	Formed Parts from metal strip	" "	13-1-1A	11
IM	Mica Spacers	Outside	13-1-1A	12
I	Parts made of Refractory material	Parts Dept.	13-1-1A	13
T	Parts made from seamless tubing	" "	13-1-1A	14
M	Miscellaneous Assemblies	" "	13-1-1A	15
L	Parts made from wire cloth	" "	13-1-1A	16
F	Formed Filaments	" "	14-1-1	2
P	Plates	" "	9-1-1	3
FG-1	Factory Grid Assemblies	Factory Pts. Prep.	8-1-1	2
FG-2	" " "	" " "	8-1-1	3
FG-3	" " "	" " "	8-1-1	4
FG-4	" " "	" " "	8-1-1	5
FS	Factory Stem Assemlies	" " "	12-1-0	2
FM	Miscellaneous Factory Assemblies	" " "	13-1-2	2
FW	Factory Formed or Assembles Wire Parts	" " "	13-1-2	3
FR	Factory Assemblies of R Parts	" " "	13-1-2	4
FF	Factory Coated or Formed Filaments	" " "	14-1-1A	2
FK	Factory Coated Cathode Assemblies	" " "	14-1-1B	2
FZ	Factory Getter Assemblies	" " "	15-1-1	2
FB	Factory Bulb Assemblies	" " "	17-1-0	2

SUPERSEDED BY p. 3 & 4 (H-1)

COMPLETE TUBE ASSLY
See Stdzg. Not. 3-1G-0, page 1-3(10), figure 407.

BASE CONNECTIONS
RMA

Pin No.	Element
1	F
2	P
3	G
4	F

COMPLETE MOUNT ASSLY

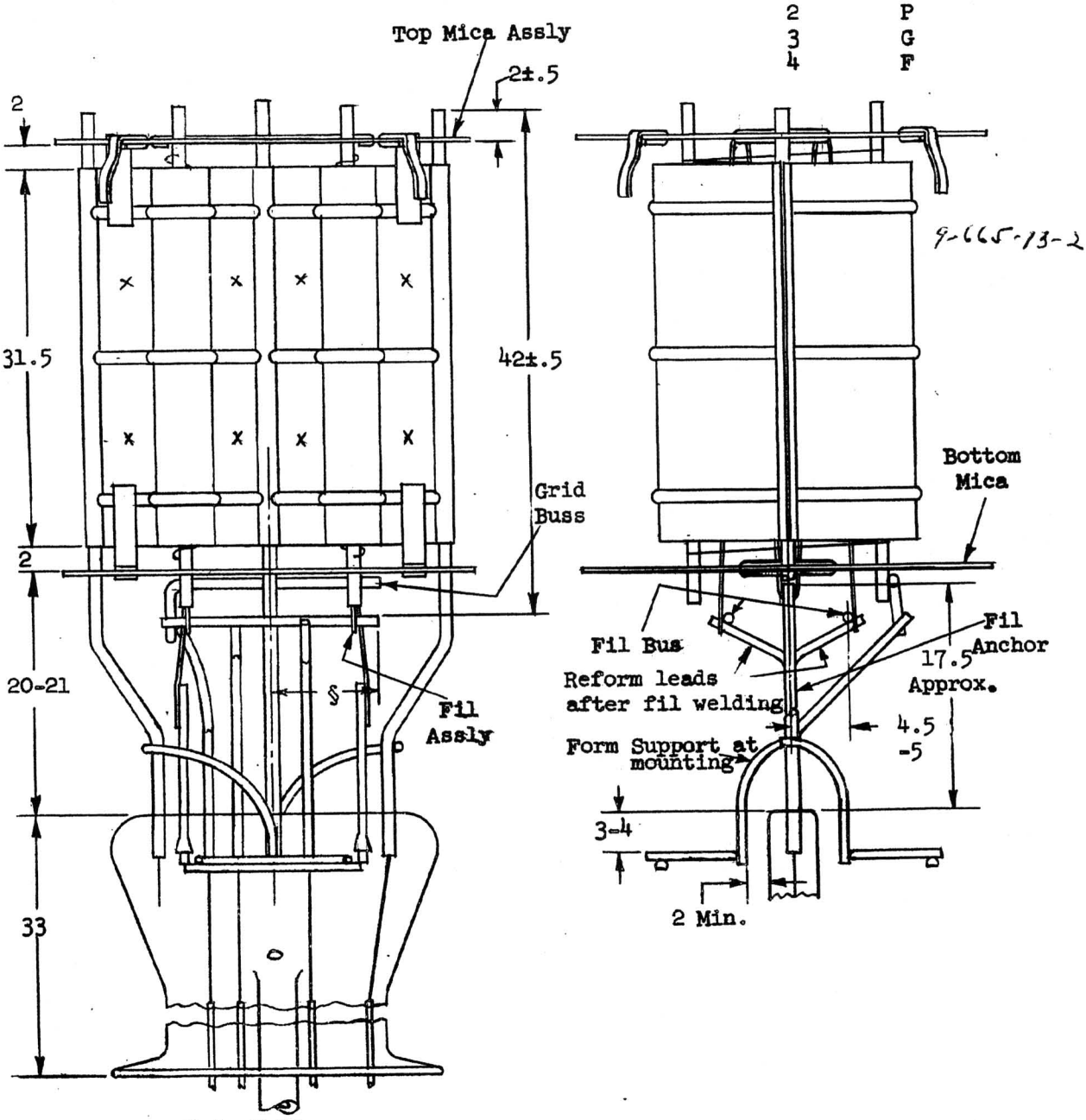

X Indicates Plate Welds
§ = 10.5 max. each side and fil busses must be parallel.

SCALE— 2:1

DIMENSIONS IN mm UNLESS OTHERWISE SHOWN. DIMENSIONS SHOWN WITHOUT TOLERANCES ARE DESIGN CENTERS

5-6210-18-1 7210/BN

* CHANGE
** ADDITION
*** DELETION

REFERENCE TYPES For CODED Product-See PAGE 8-Established ONLY if CODES Assigned

TUBE HEATER RATING
VOLTS 2.5
AMPS 2.5

PART DESCRIPTION	Q/M	PRESENT STANDARD (CURRENTLY AUTHORIZED) NOMENCLATURE INDEX LISTED IN S.N. 1-1-1	ALTERNATE (USE ONLY AS NOTED)	NOTE
Bulb	M	ST16B1, No. 0080 Glass		
Base	M	4106-B1		
Stem	M	FS1249N		
Filament	2M	FF128V		
Grid No. 1	2M	G3614-1V(1)		
Plate	2M	PH32F-S72S1 (W1032,FAH10)		
Getter Assly	2M	FZ456B		
Mica Assly, Top	M	FM2732R		
Mica, Bottom	M	FIM1119-M2D-2C2-2S43-FAF10		
Busses Fil	2M	35-18A1-I23W15 (W1032,FAH10)		
Buss Grid	M	10W1-I23W15 (W1032,FAH10)		
→ Anchor Fil	2M	.010"x.020"x12mm-I22H **(W1032,FAJ10)		

FOR PACKING MATERIALS, CEMENT, SOLDER, ETC., EXCEPT AS LISTED REFER TO STANDARDIZING NOTICE 3-1G-0, p.1(NON-OCTAL)

NOTES:

THE DOWD-RCA ARCHIVE
THE PERHAM-EIMAC ARCHIVE

THE DOWD-RCA ARCHIVE

Origins. A powerful resource of the AWA Museum for tube history is the Dowd-RCA Archive. This material originated in "the vault" at the Harrison Works and was rescued from the dumpster in 1976 by Bro. Patrick Dowd. Bruce Kelley reported on this "save" in the Dec. 1976 *OTB*. Lauren Peckham provided storage space until the Museum and the undersigned executed a two-year loan agreement / storage donation in May, 1998. The agreement has been extended for two years. The books are housed on custom-built shelves in a former school gymnasium.

Contents of the Archive. The first attachment details the physical contents of this material: basically one set of product-management binders and four sets of Standardizing Notices of varying vintage. The latter are RCA's corporate "recipes" for making tubes. The "Index to RCA-Harrison Standardizing Notices," also attached, covers them; it gives RCA's indexing scheme and points out specific nuggets of information that have been found.

While complete in its intended content, the archive does not include much in the way of development reports or field-engineering material. It does not contain photographs. A modest limitation of the archive is that, while full construction details are given for developmental tubes, their electrical specs are spotty at best.

Since the Harrison material was received, Bro. Dowd has sent several boxes of additional RCA material: mainly the papers of tube researcher A. Danforth Cope. This addition is partly organized at the moment, and should be ready for use by October.

Recent Treatment. Stabilization and marking of the books are effectively complete. The product-management binders have had rusty staples removed and (sparingly) replaced, with stiff endpapers added and computer-printed volume labels put on. The blue Accopress folders had their rusty prong fasteners replaced and endpapers added.

The 100 or so most important folders have received acetate label holders in their spines, with computer-printed labels added. (Previously the folders were anonymous as seen on the shelf, RCA's fragile paper tags having long since broken off.)

The cloth-covered binders had end papers intact but the glue holding their fabric volume labels had let go in storage. The labels have been reattached with PVA adhesive. About 100 of the binders had been renumbered at the plant with ball-point ink. The ink had faded to illegibility, so computer-printed numbers matching the original type style have been added. The binders are grimy (they were used for perhaps 25 years in a coal-fired manufacturing plant), and some have rodent damage, but this does not particularly harm their usability.

A cross-reference of 2000+ type numbers, developmental vs. commercial, has been made up as a "finding aid." It was handed out in the tube session at the Rochester 1999 meet.

Visitors. The archive is presently outside Gold Hill, OR, about 40 miles north of the California border and seven miles from I-5, the main north-south route on the West Coast. The archive is open for research visits by arrangement.

Use to Date. There has been modest research use by others so far. However, essentially all the "nuggets" in italic type on the attached "Index to . . . Standardizing Notices" have been written up for the tube-collector press, and most have already appeared in print. This material has also proven invaluable in improving the Tube Lore data base. It has provided answers to a large volume of outside inquiries. (But success is not automatic: a recent request from a group of color-TV collectors for construction details on the 15GP22 picture tube was a failure: 15GP22 was a post-1942 CRT, and therefore a "Lancaster" type!).

Next. As for the long-run future, space for this resource might be appropriate in a future AWA Museum building.

Ludwell Sibley
(541) 855-5207
tubelore@internetcds.com
8-12-00

Attachments:
"Dowd-RCA Harrison Archive"
"Index to RCA-Harrison Standardizing Notices"

THE PERHAM-EIMAC ARCHIVE

Origins. An excellent new asset of the Perham Foundation, Inc. for research into West Coast tube history is the Perham-Eimac Archive. This material came from the central engineering files of Eitel-McCullough, Inc. It came out of storage (some of it had been boxed-up since 1959) and was donated to the Foundation when Varian Associates divested its Eimac division. A loan / storage-donation agreement is in effect, beginning in June of this year. The files are being housed with the Dowd-RCA Archive. The total volume of material will equate to perhaps 100 shelf-feet when fully organized.

Contents of the Archive. The archive is a mixed resource derived from both the San Bruno (CA) and the Salt Lake City plants, plus the Eimac research labs. It may be summed up as:

■ Record books on specific commercial tubes. These occupy about 30% of the total volume. Their time span is mainly 1942-1960, with exceptions. There are individual binders on the early products (35T, 100TH, through 2000T) and middle-term types (4X150, 4W20,000, 4KM50,000, etc.)

■ Records on Eimac developmental tubes from X-0 to about X-800. For a given type, there is at least a summary; however, in some cases there are complete books. There is exhaustive coverage of the small ceramic receiving tubes that were developed for the Air Force but never produced. There are hints of Eimac's 1953 research into making the Lawrence "Chromatron" color picture tube.

■ Research reports - interim status and complete - on tubes and tube technologies developed under contract. The types covered are mainly power klystrons of the '50s.

■ Patent-department files, mainly from the '40s-'50s but with some earlier and later material. There are records on Eimac's large patent portfolio and on the company's patent-licensing arrangements with other tube companies. There is a binder of patent ideas that Bill Eitel sent the company attorney while running the Salt Lake City tube plant in 1943.

■ A large residue of lab-test data, manufacturing processes, project status reports (individuals' weekly reports, departments' monthly reports, etc.), plus bulky minutiae like furnace operating logs. There are a few analysis reports on captured enemy tubes of WW II, a lengthy file on the Zahl radar tube, information on what tubes Eimac made for others (3X2500A3s for GE, 10BP4s and 24CP4s for RCA Victor, etc.) Eimac's date-code scheme can be deduced from the files. There is a recently uncovered, highly comprehensive 1942 report on the state of tube development for radar.

Unlike the RCA files, the Eimac archive has little in the way of "marketing" material. It does have, scattered through the files, numerous 8" x 10" photos of developmental tubes, factory equipment, huge klystrons under test, etc. A more comprehensive report will be possible once the files are fully sorted and organized.

Recent Treatment. Physically, the archive is a mix of ring binders, Accopress folders, and file folders. Previous storage was in dry and rodent-free conditions, so the condition is quite good. At this point the binders/folders on specific tube types, and on developmentals, are organized, marked with computer-printed labels, equipped with end papers, and shelved. The rest is "in process" and should be organized in six months.

Use to Date. In the three months since delivery, the archive has already proven a fine photo source for the tube-collector press. Several short articles are in preparation based on this material, as is a full index to the developmental tubes. The files on developmental types have helped answer a couple of collector inquiries on tubes they own.